Orbit Feedback System around IP

Y. Funakoshi(KEK)

Necessity for the system

KEKB is a double ring collider.

↓

An orbit feedback system is vital to keep an optimum collision condition.

Requirement to the system

① Degradation of luminosity
(geometrical loss)

$$\mathcal{L}_0 = \frac{N_1 N_2 f}{4\pi \sigma_x^2 \sigma_y^*}$$

(i) offset Δy

$$\mathcal{L} = \mathcal{L}_0 \exp\left[-\frac{(\Delta y)^2}{4\sigma_y^{*2}}\right]$$

Δy	$1 - \mathcal{L}/\mathcal{L}_0$
$0.3\,\sigma_y^*$	2.2%
$0.5\,\sigma_y^*$	6.1%
$1.0\,\sigma_y^*$	22.1%

$$\boxed{\Delta y < 0.3\,\sigma_y^*}$$

(ii) crossing angle $\Delta y'$

$$\mathcal{L} = \mathcal{L}_0 \frac{1}{\sqrt{1+\left(\frac{\sigma_\ell}{\sigma_y^*}\frac{\Delta y'}{2}\right)^2}} \quad (\Delta y' \approx 0)$$

$\Delta y'$	$1 - \mathcal{L}/\mathcal{L}_0$
$0.3\,\frac{\sigma_y^*}{\sigma_\ell}$	1.1%
$0.5\,\frac{\sigma_y^*}{\sigma_\ell}$	3.0%

$$\boxed{\Delta y' < 0.3 \cdot \frac{\sigma_y^*}{\sigma_\ell}}$$

Composition of the System

Minimum

(1)BPM
- 8 electrode-type : 2 units

(2)Steering
- Vertical magnet : 4 units
  kick angle : ~0.1mrad
- Power Supply : 4 units

(3)BPM Circuit
- VXI module
  - relay(8ch inputs) : 2 units
  - Front-end signal processor module : 1～2Units
  - MIX Module
- VME module
  - IOC
  - DAC
  - MIX Module

Backup

(1)BPM
- normal type : 4 units(outsides of QCS)

(2)Steering
- Horizontal Magnets : 4 units
- Power Supply : 4 units

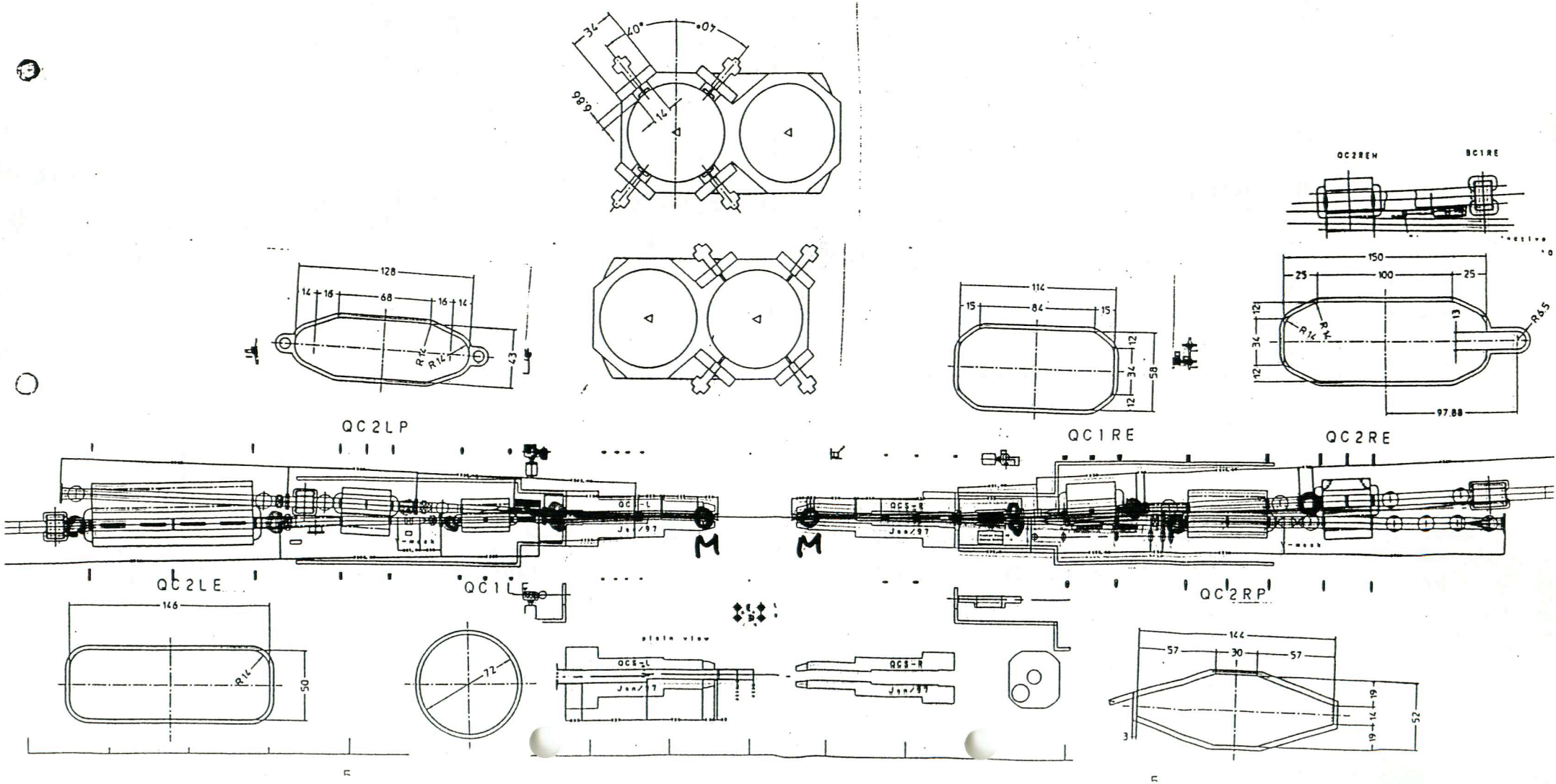
QC2LP
QC1RE
QC2RE
QC2LE
QC1LE
QC2RP
QC2REH
BC1RE
plain view
QCS-L
QCS-R
Jan/97
128
68
43
114
84
58
150
100
25
97.88
146
50
72
144
57
30
52

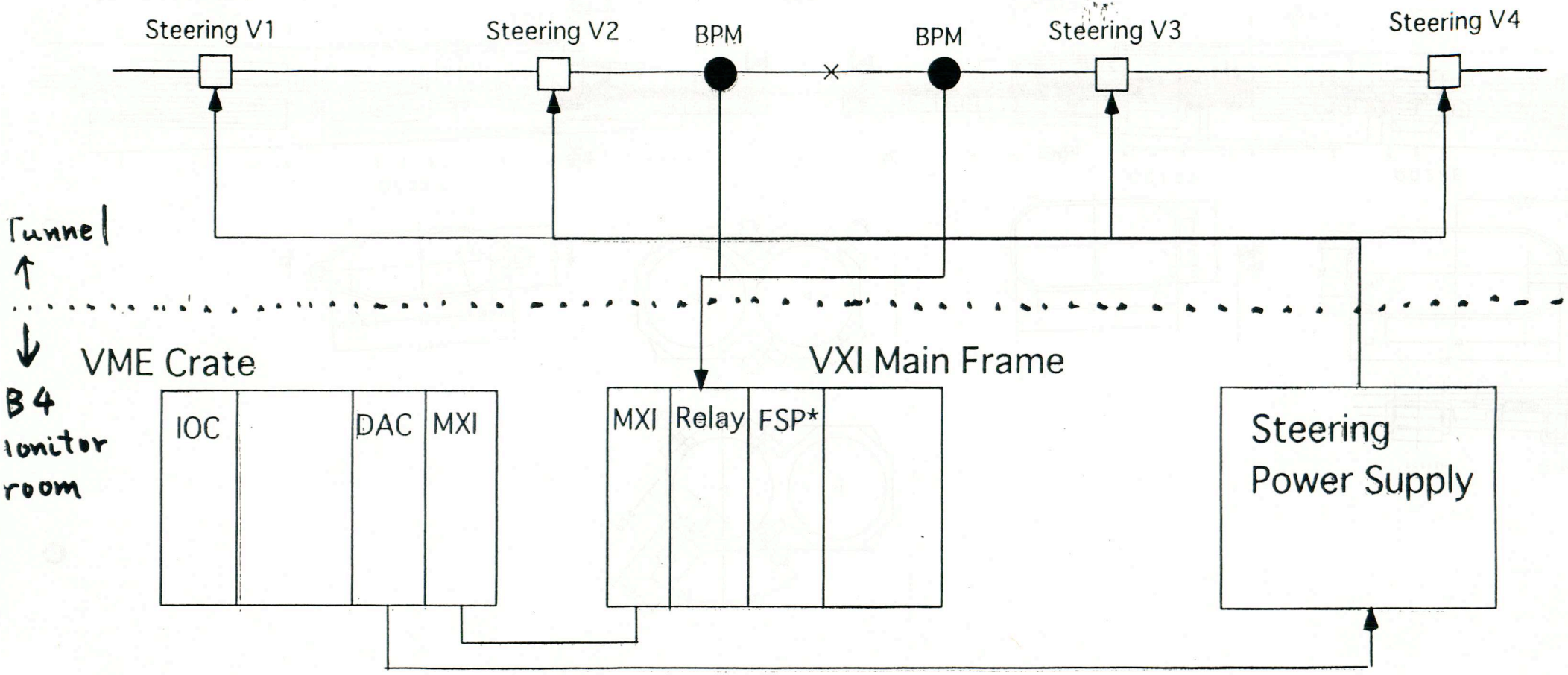

* Front-end signal processor

Orbit Feedback Conceptual Block Diagram (minimum)

QCS-L側回転設置タイプ位置モニター最終譲歩御提案図

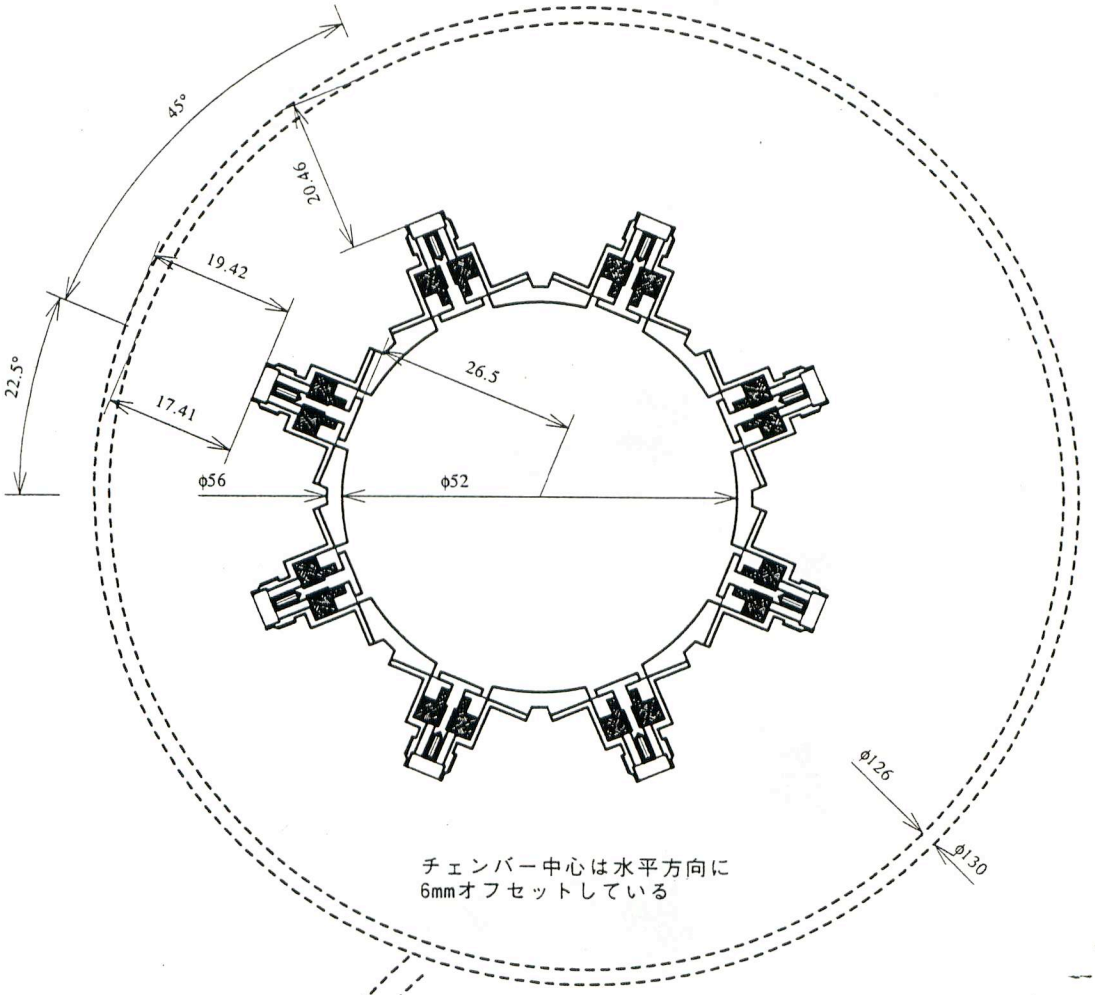

チェンバー中心は水平方向に
6mmオフセットしている

作図：M.Tobiyama 14/Feb/97

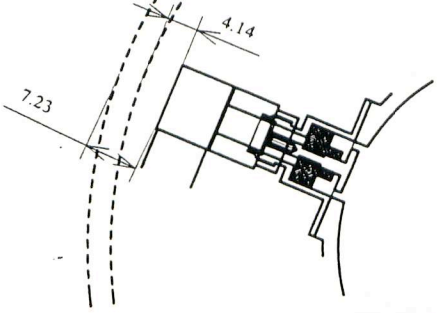

コネクタの取り合い
内側の点線円は、QCSが
最大近づいた時の限界

QCS-R側回転配置タイプ位置モニター最終譲歩御提案図

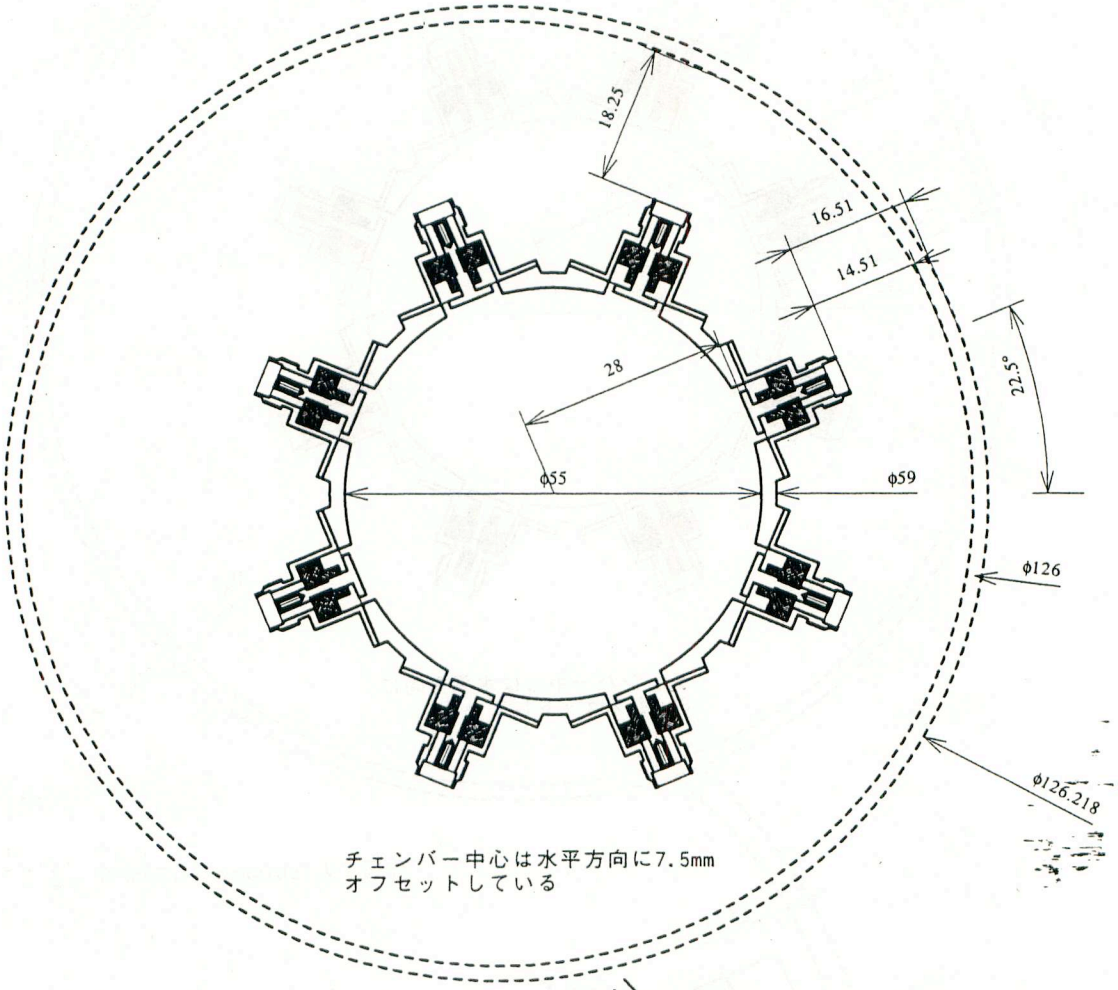

チェンバー中心は水平方向に7.5mm
オフセットしている

作図：M.Tobiyama 13/Feb/97

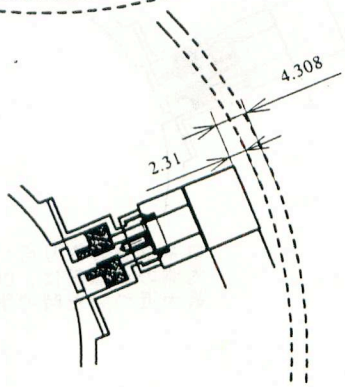

コネクタの取り合い
内側の点線円は、QCSが
最大近づいた時の限界

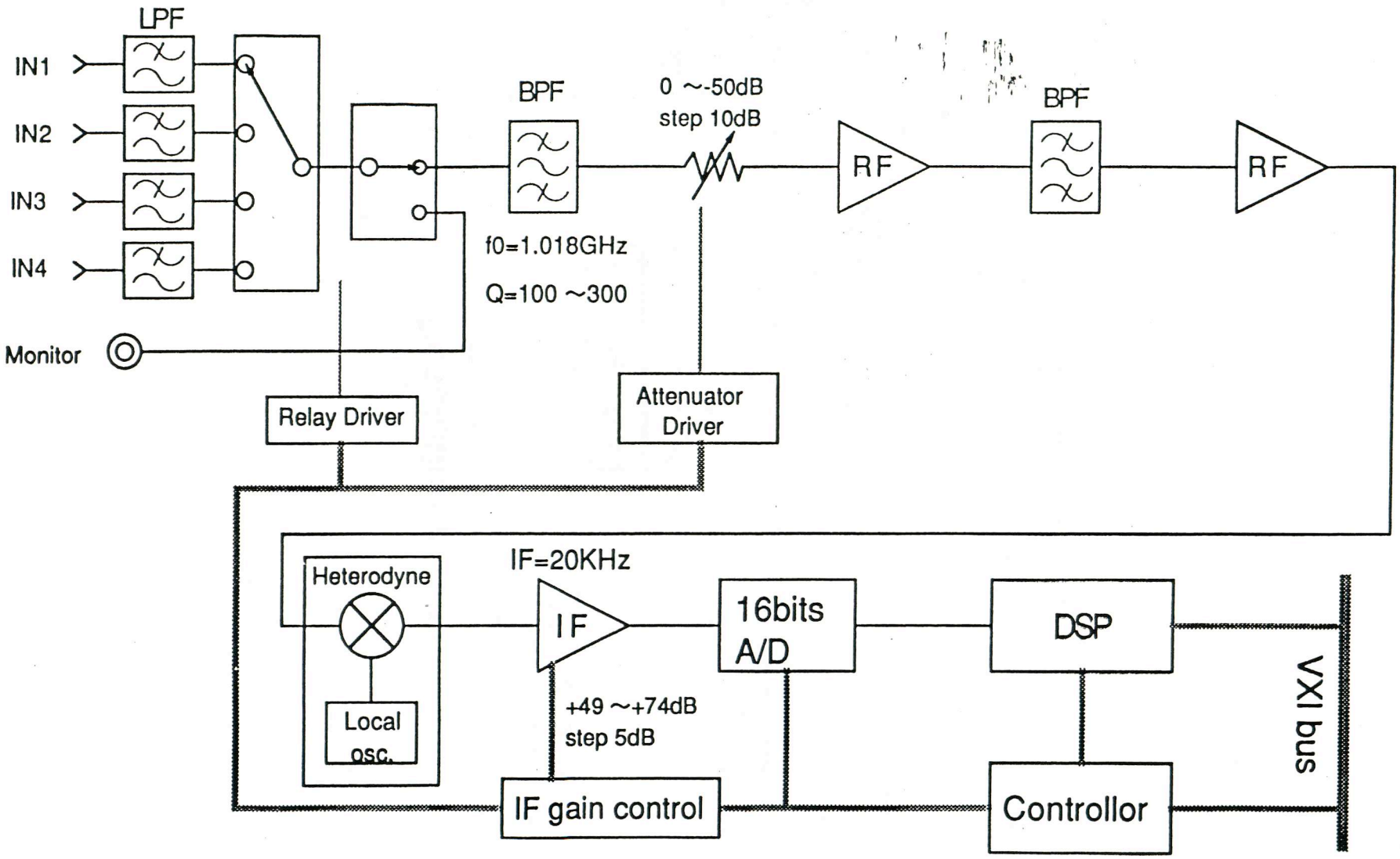

Block diagram of the front-end signal processor.

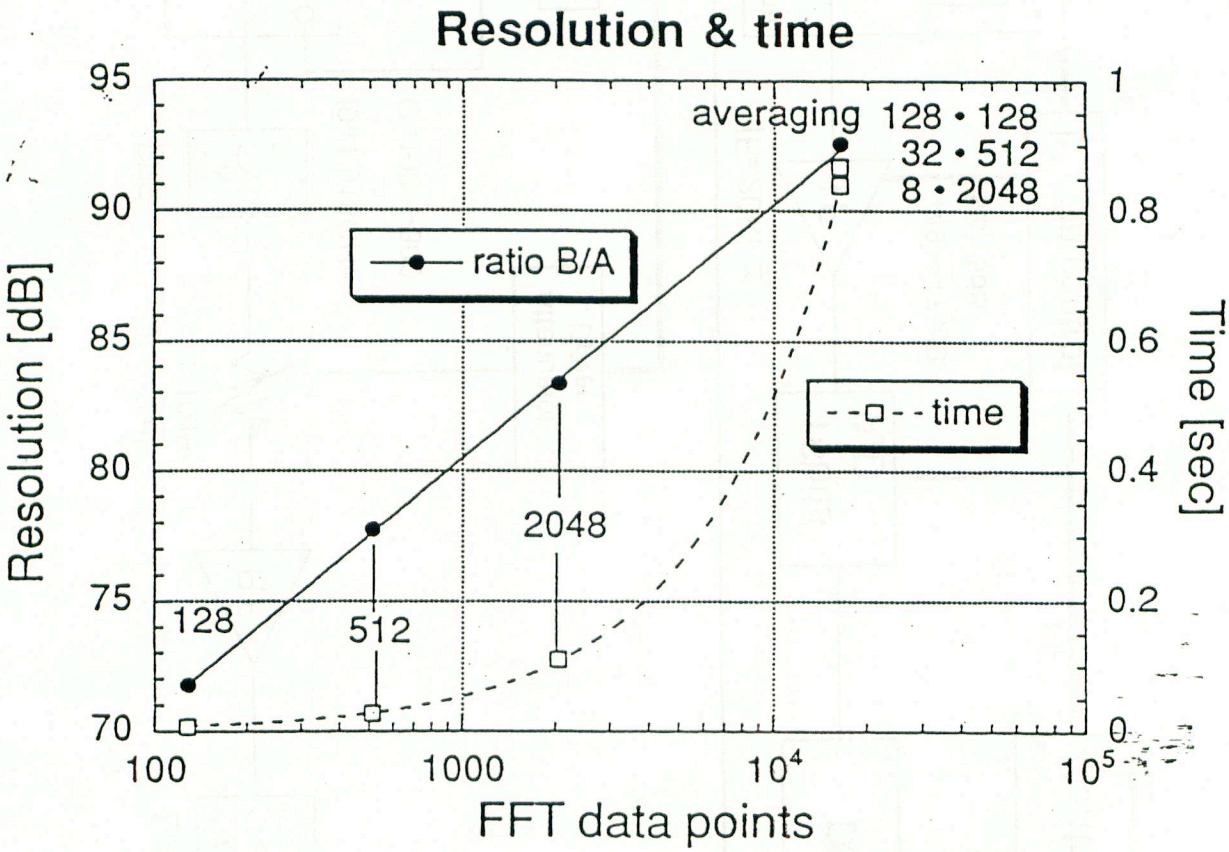
Resolution & time
averaging 128 • 128
32 • 512
8 • 2048
ratio B/A
time
128
512
2048
Resolution [dB]
Time [sec]
FFT data points
95
90
85
80
75
70
1
0.8
0.6
0.4
0.2
0
100
1000
10^4
10^5

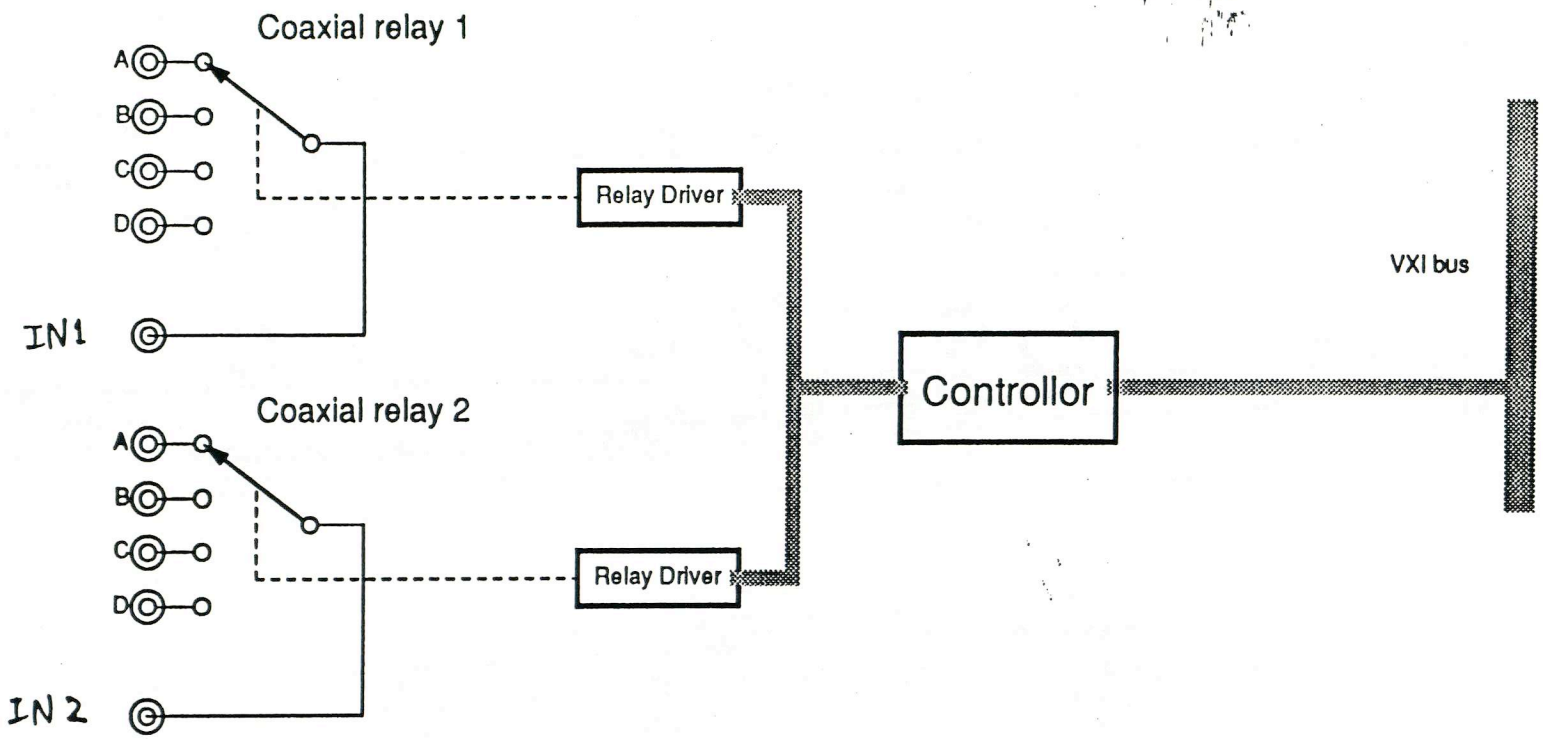

図ー2　リレーモジュールのブロックダイアグラム

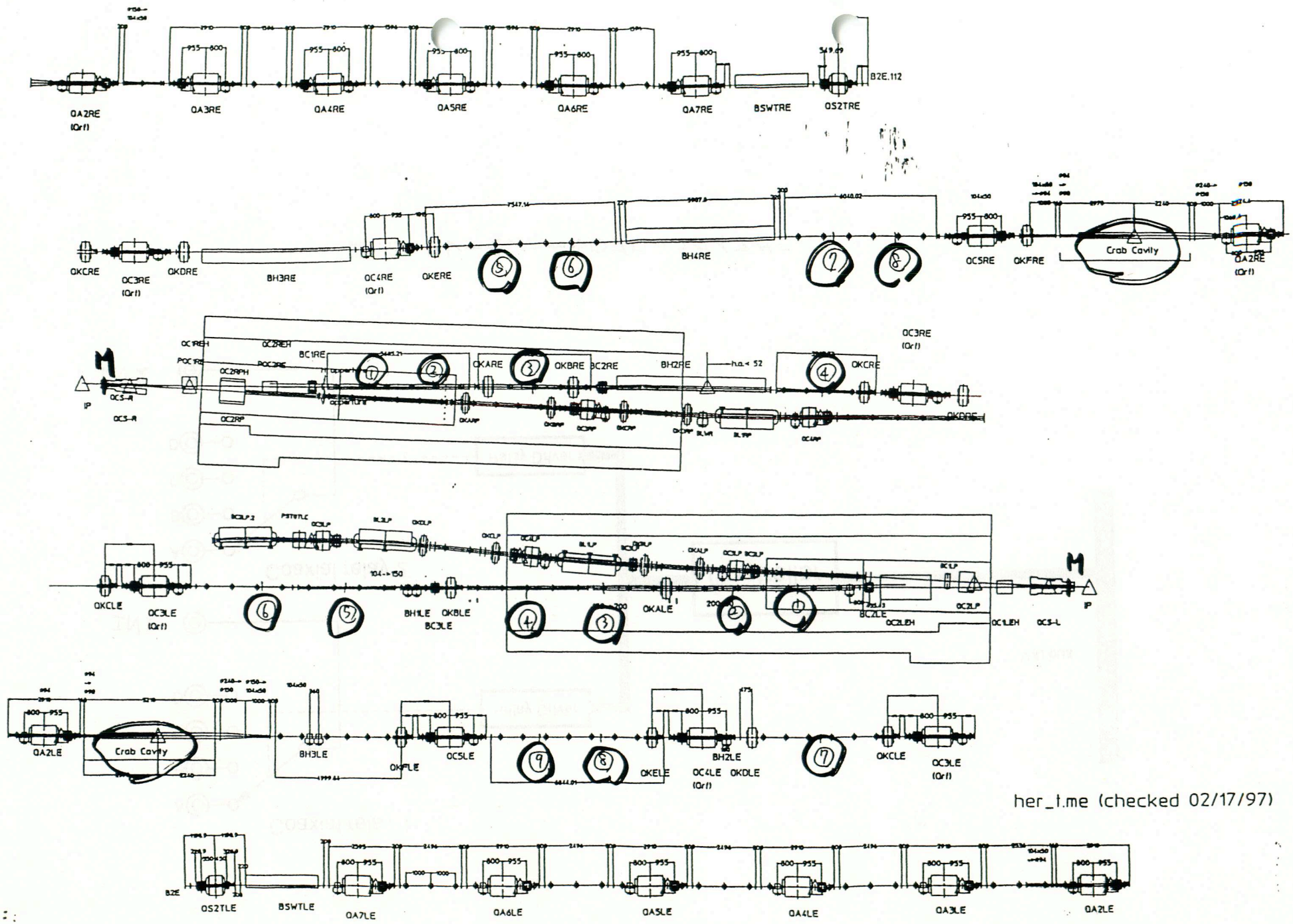

her_t.me (checked 02/17/97)

steering kick angle

Sheet1

	ZRV1	ZRV2	ZRV3	ZRV4	ZRV5	ZRV6	ZRV7	ZRV8
ZRV1	*	2.16E-04	1.16E-04	8.11E-05	6.58E-05	6.48E-05	6.23E-05	[illegible]
ZRV2	-1.55E-04	*	1.79E-04	9.29E-05	6.77E-05	6.62E-05	6.27E-05	6.22E-05
ZRV3	-5.44E-05	-1.17E-04	*	1.27E-04	7.14E-05	6.89E-05	6.33E-05	6.26E-05
ZRV4	-1.97E-05	-3.15E-05	-6.56E-05	*	8.43E-05	7.78E-05	6.53E-05	[illegible]
ZRV5	-1.29E-05	-1.85E-05	-2.98E-05	-6.81E-05	*	8.09E-04	2.33E-04	2.13E-04
ZRV6	-1.11E-05	-1.59E-05	-2.52E-05	-5.51E-05	-7.09E-04	*	2.87E-04	2.53E-04
ZRV7	-6.98E-06	-9.81E-06	-1.51E-05	-3.01E-05	-1.33E-04	-1.87E-04	*	1.40E-03
ZRV8	-6.45E-06	-9.05E-06	-1.39E-05	-2.74E-05	-1.13E-04	-1.53E-04	-1.30E-03	*

$\Delta y = 0.1$ mm

$\Delta y' = 0$ mrad

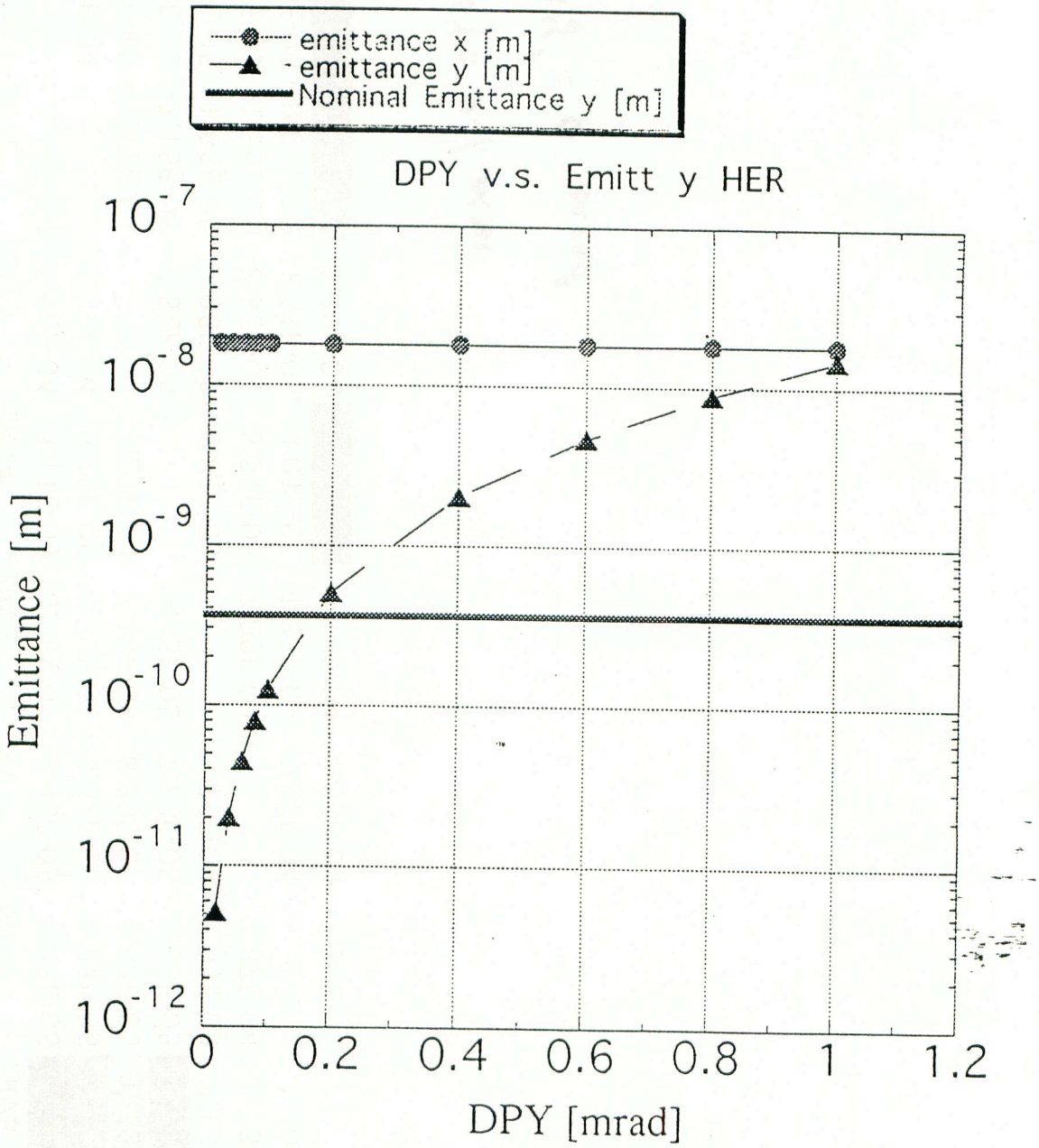
emittance x [m]
emittance y [m]
Nominal Emittance y [m]
DPY v.s. Emitt y HER
Emittance [m]
10^-7
10^-8
10^-9
10^-10
10^-11
10^-12
0
0.2
0.4
0.6
0.8
1
1.2
DPY [mrad]

$\Delta y'$ at IP