Beam Transport Line

and

Injection System

Mar 6 1998

1:Magnet

2:Power Supply

3:Instrumentation

4:Injection System

1:Magnet

<Specification>

Dipole magnets:

$\Delta B/B < \pm 1e\text{-}3$ in Good Field Region

Quadrupole magnet

$\Delta dB/dx / dB/dx < \pm 1e\text{-}3$

in Good Field Region

<Fabrication status>

# of New Magnets

	Total	Fabricated
Dipole magnets	102 (15 Types)	36%
Quadrupole magnet	68 (5 Types)	78%
Sextupole magnets	8 (1 Types)	100%
Steering magnets	73 (4 Types)	100%

# of Recycled Magnets

Dipole magnets	40 (4 Types)
Quadrupole magnet	80 (2 Types)
Steering magnets	30 (4 Types)

<Field Measurement>

Goal : Get excitation curve

Sort Magnets

Check Coil trouble

See Field quality

What we measure ?:

- **Dipole Magnets (Rotating Coil)**

  1)Excitation Curve of

  B and BL at center of magnet

  2) B and BL distribution @ Operation Point

- **Dipole Magnets (Mapping)**

  1)Excitation Curve of

  B and BL at center of magnet

  2) B distribution @ Operation Point

- **Quadrupole & Sextupole magnets (Rotating Coil)**

  1)Excitation Curve

  2)dB/dx distribution in r<1.35cm

Absolute value

◆Quadrupole & Sextupole magnets

Rotating Coil

->Put whole rotating coil into Dipole Magnet (Measure B field with NMR)

Known parameter :

B and (Coil length)

Then determine Coil radius.

◆Dipole magnets

Rotating Coil

->Center B field : NMR

->Effective Length:

Put whole rotating coil into Dipole Magnet

Mapping - B Field: NMR

Corrections

<Quadrupole & Sextupole magnets>

Perturbation from ununiformed rotatin velocity of the coil

<Dipole magnets>

Rotating Coil

->B field : NMR

->Effective Length:

Put whole rotating coil into Dipole Magnet

Mapping - Hole

Hole Probe Temperature Dependence (Correction < 1e-3)

Position of the Hole Probe (Accuracy < .1mm)

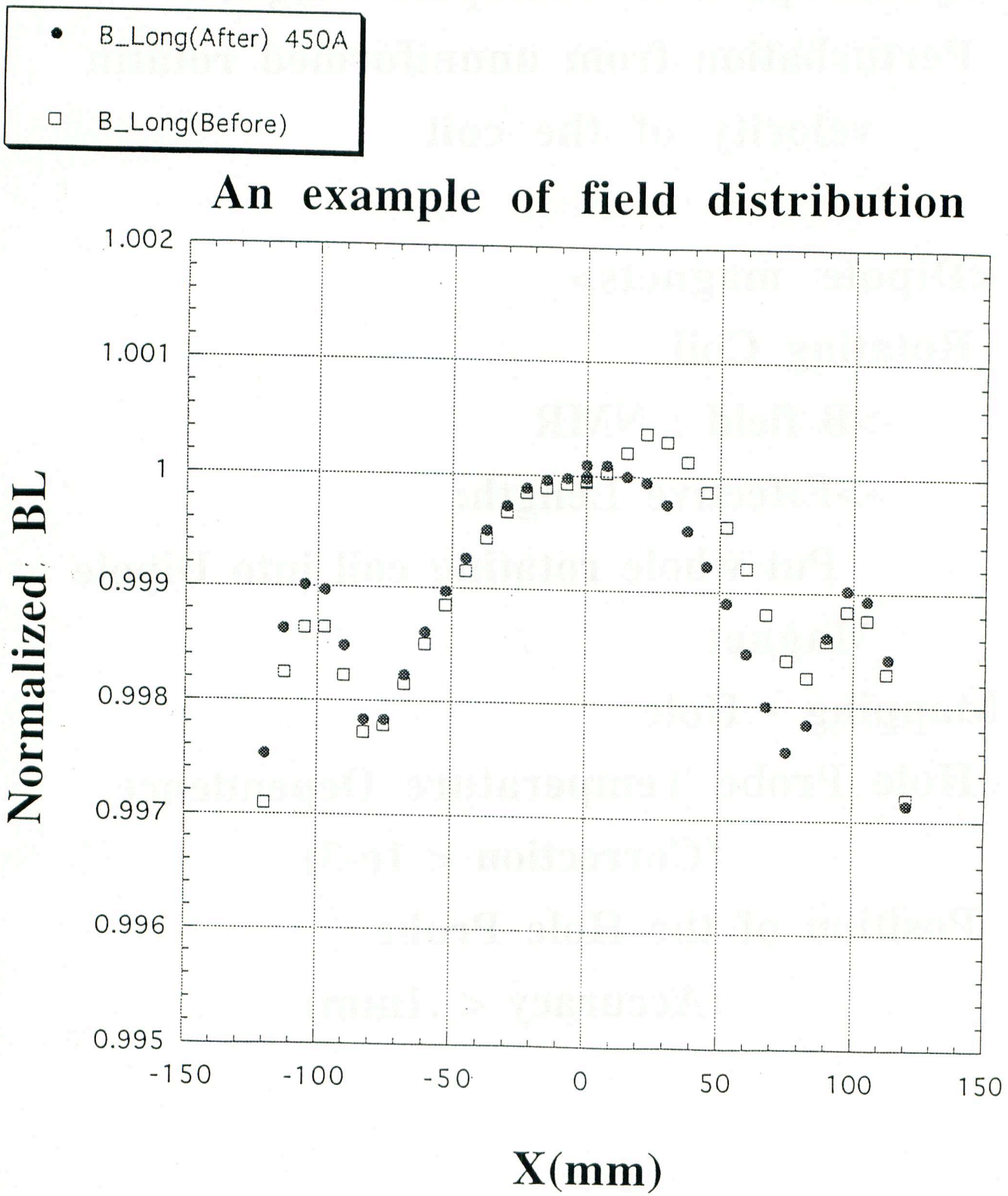
B_Long(After) 450A
B_Long(Before)
An example of field distribution
Normalized BL
1.002
1.001
1
0.999
0.998
0.997
0.996
0.995
-150
-100
-50
0
50
100
150
X(mm)

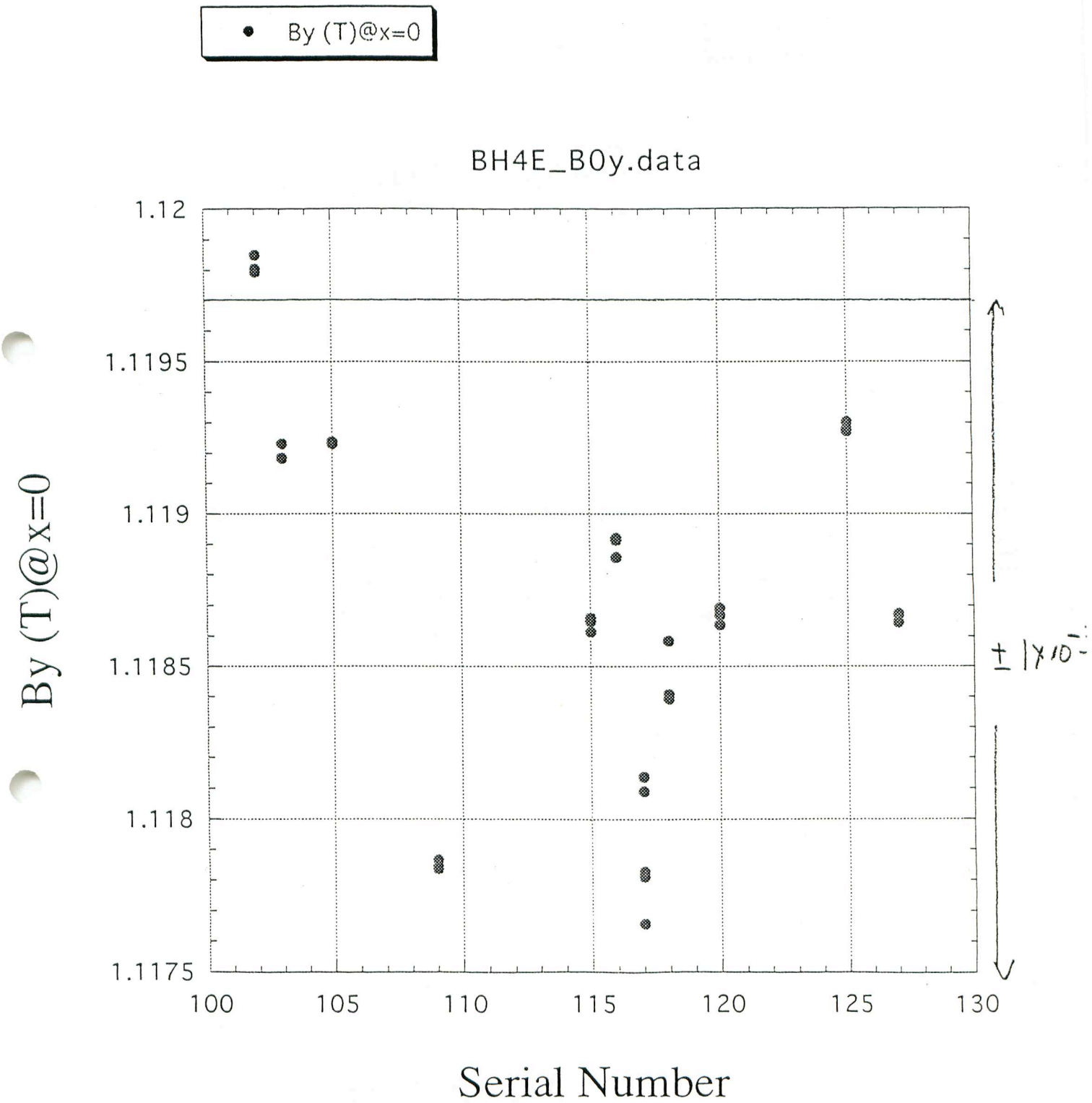
By (T)@x=0
BH4E_B0y.data
1.12
1.1195
1.119
1.1185
1.118
1.1175
100
105
110
115
120
125
130
By (T)@x=0
Serial Number
± 1×10⁻⁴

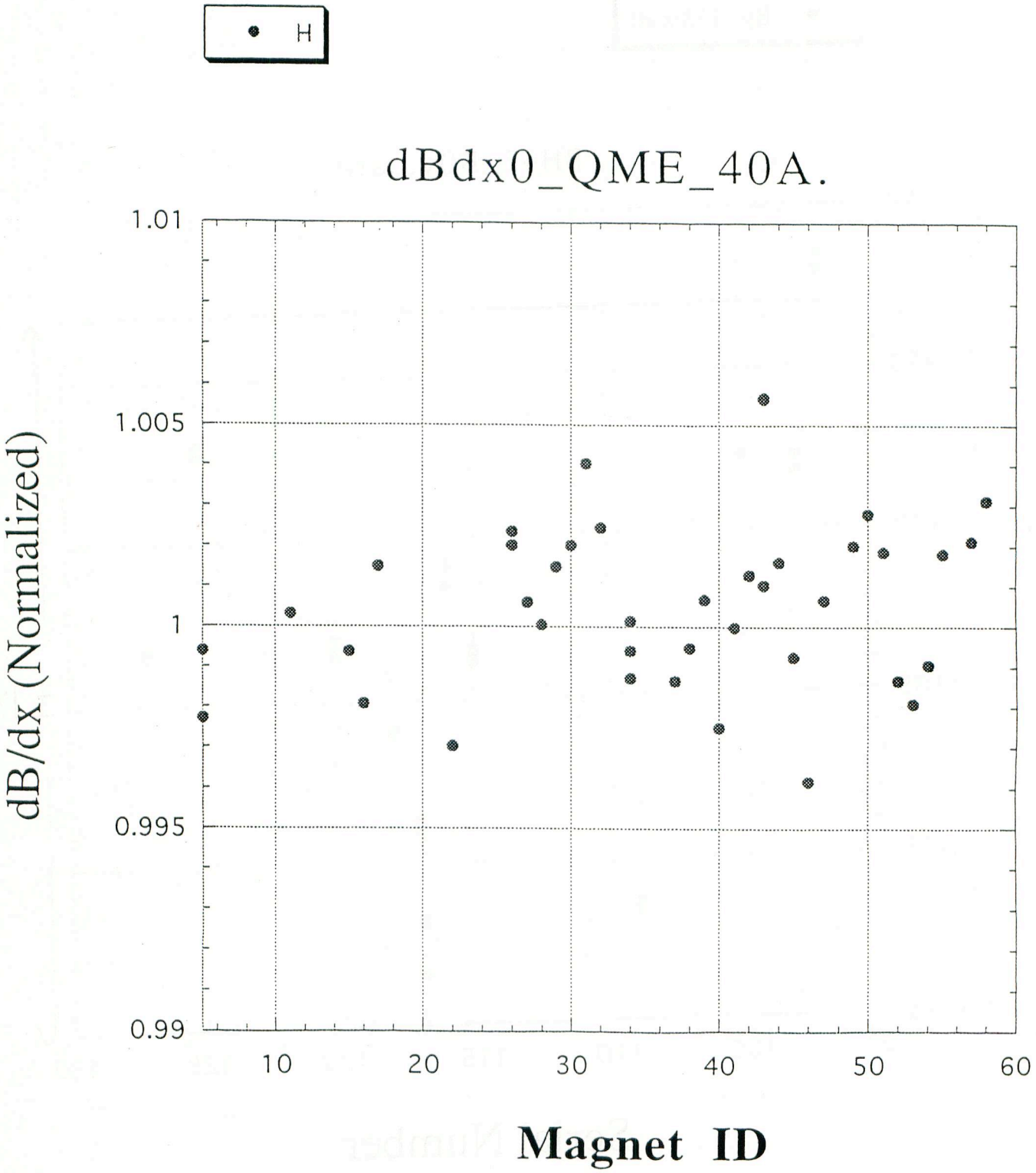
H
dBdx0_QME_40A.
1.01
1.005
1
0.995
0.99
dB/dx (Normalized)
10
20
30
40
50
60
Magnet ID

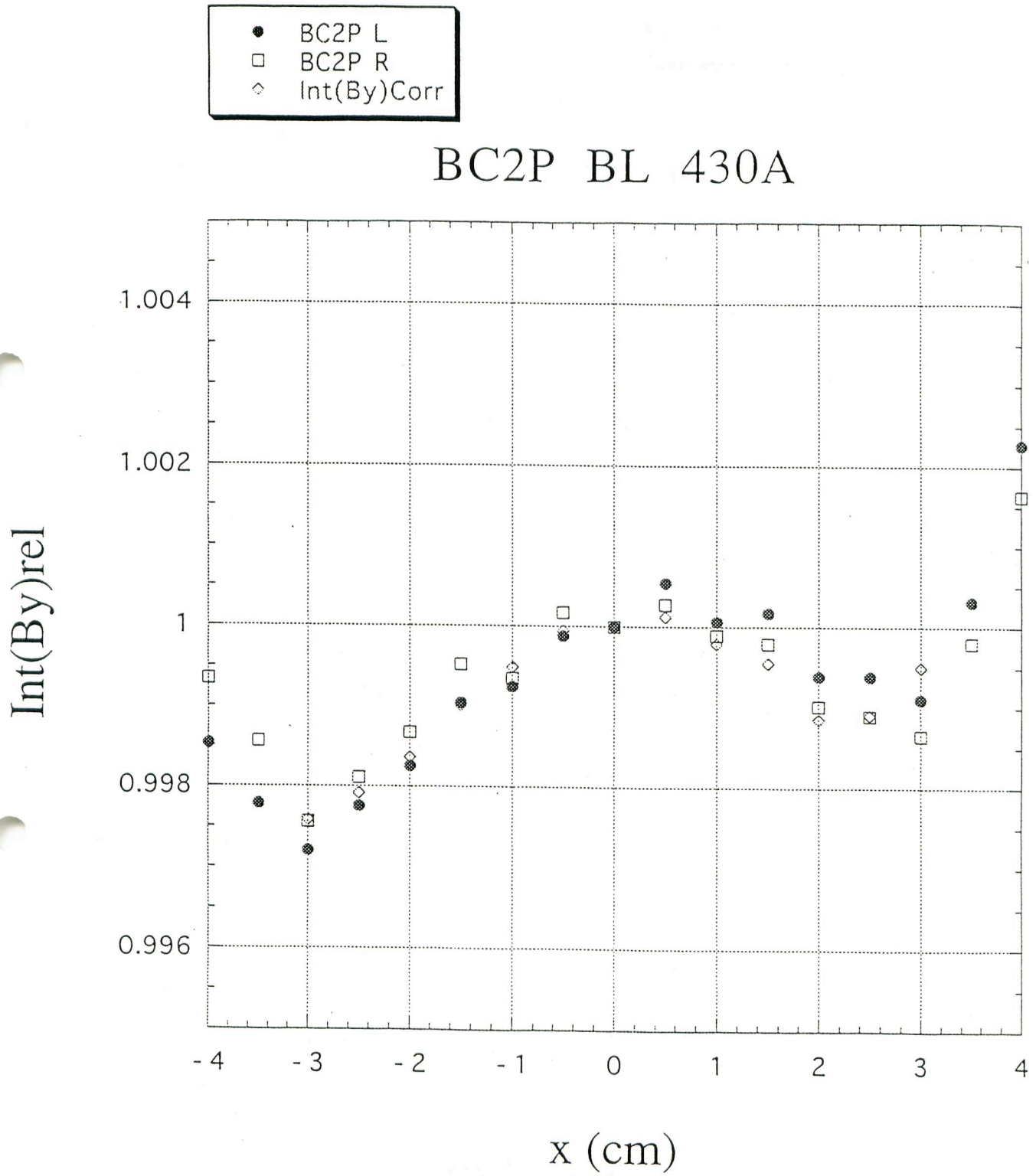
BC2P L
BC2P R
Int(By)Corr
BC2P BL 430A
1.004
1.002
1
0.998
0.996
Int(By)rel
-4
-3
-2
-1
0
1
2
3
4
x (cm)

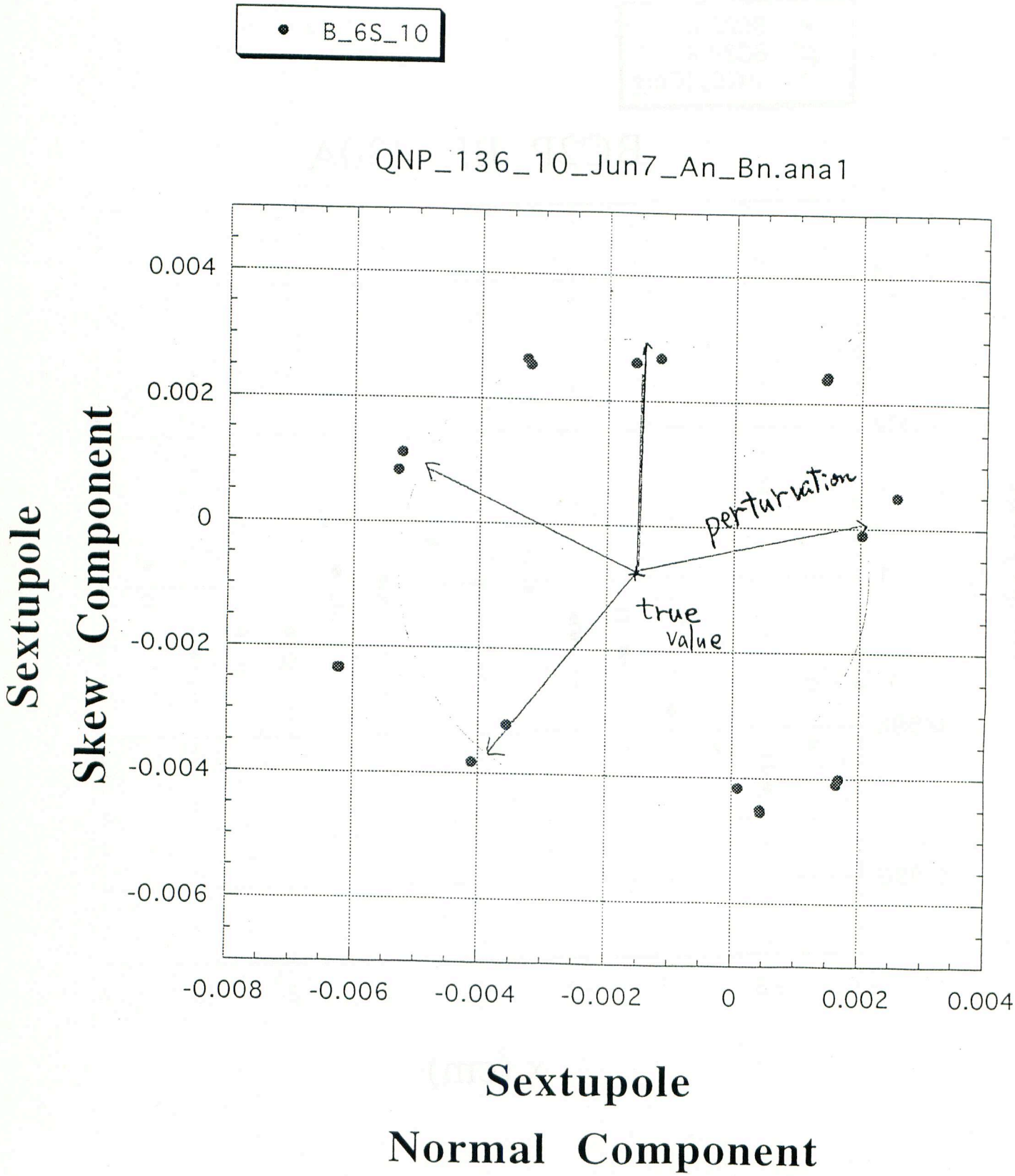
B_6S_10
QNP_136_10_Jun7_An_Bn.ana1
0.004
0.002
0
-0.002
-0.004
-0.006
-0.008
-0.006
-0.004
-0.002
0
0.002
0.004
perturbation
true value
Sextupole Skew Component
Sextupole Normal Component

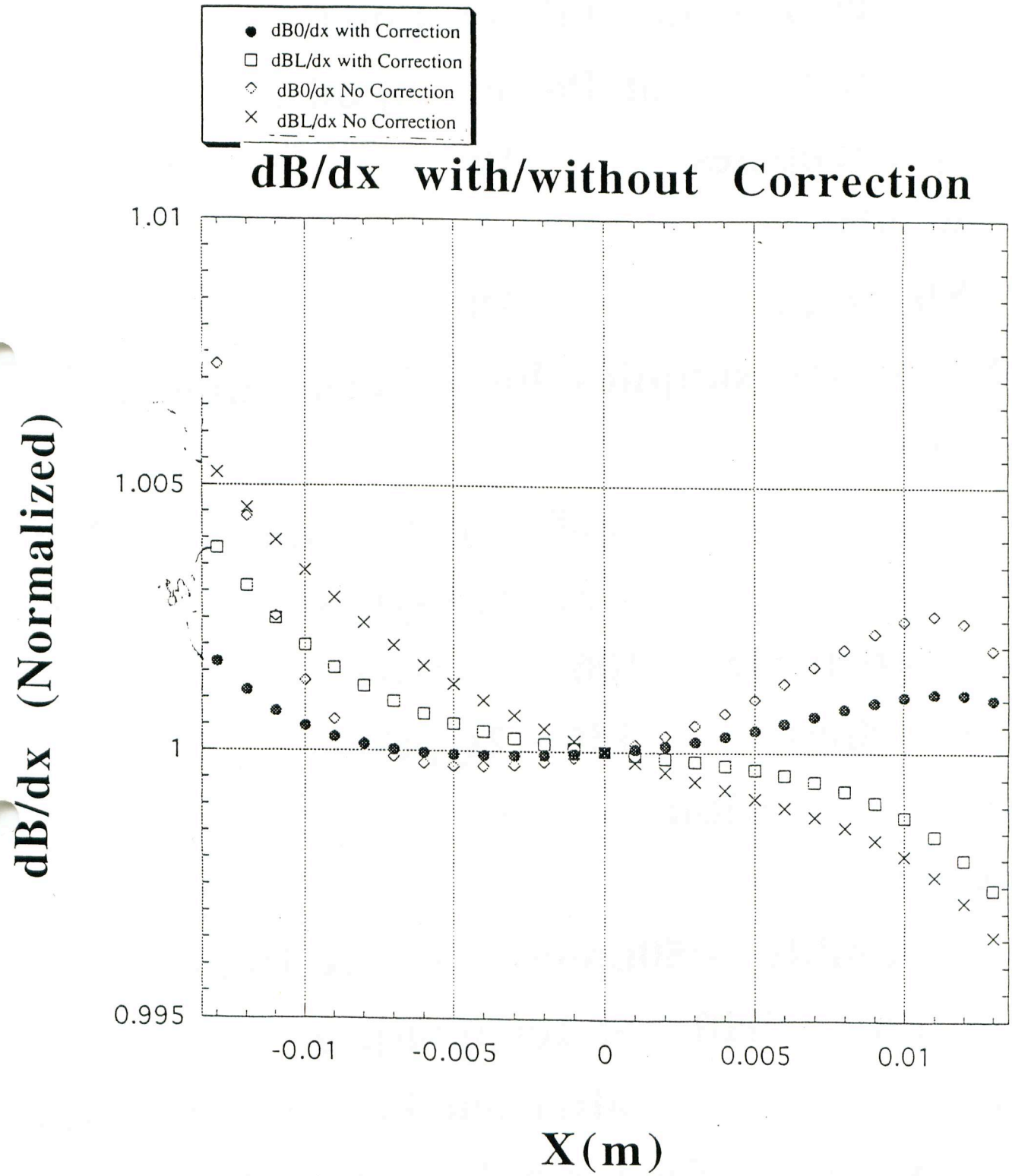
dB0/dx with Correction
dBL/dx with Correction
dB0/dx No Correction
dBL/dx No Correction
dB/dx with/without Correction
1.01
1.005
1
0.995
-0.01
-0.005
0
0.005
0.01
dB/dx (Normalized)
X(m)

2:Power Supply

<< Status >>

<Recycled > for AR BT Line(e-)

Magnet	#of Power supplies
Quadrupoles	10
Bends	4
Steerings	18

All power supplies have been implemented.

<New>

Magnet	#of Power supplies	Now
Bends	32 (23 types)	16
Quadrupoles	106 (10 types)	21
Steerings	136 (2types)	33

<<Specification >>

Bends

Stability <50ppm(p-p) 24 Hours

Initial Drift < 100ppm(p-p)

after one hour worming up

Magnetic field ripple <10ppm(p-p)

Quadrupoles

3:Instrumentation

<Beam Position Monitors>

Strip Line : A BPM is implemented for each Q Magnet

Resolution : ~100 μ m

Read Out : ~1Hz

VXI Digital Oscilloscope

5GHz Sampling (8 bit)

4channel = 32 BPM's

Switch e+/e- Line

16 electrode signals are summed up into a line with some delay

<Special BPM>

Strip Line: # of BPM=> e+: 8 e-:8

Read Out : 50Hz

<Screen Monitor>

New 40 (e+:20 e-:20)

Air Compressor system will be used for new screen monitors.

<Wire Monitor>

- **# of Wire Monitors: 10 (e+:5 e-:5)**
- **R&D 2 types (Very Preliminary !!)**

Deviation from a Linear Line

Type I	**< 10** μ m(p-p)	v-> 0 Limit (static)
	< 10 μ m(p-p)	v=4**mm/s**
	< 12 μ m(p-p)	v=20**mm/s** **(static + bibration)**
Type II	**< 10** μ m(p-p)	v-> 0 Limit
	< 10 μ m(p-p)	v=**4mm/s**
	< 20 μ m(p-p)	v=20**mm/s**

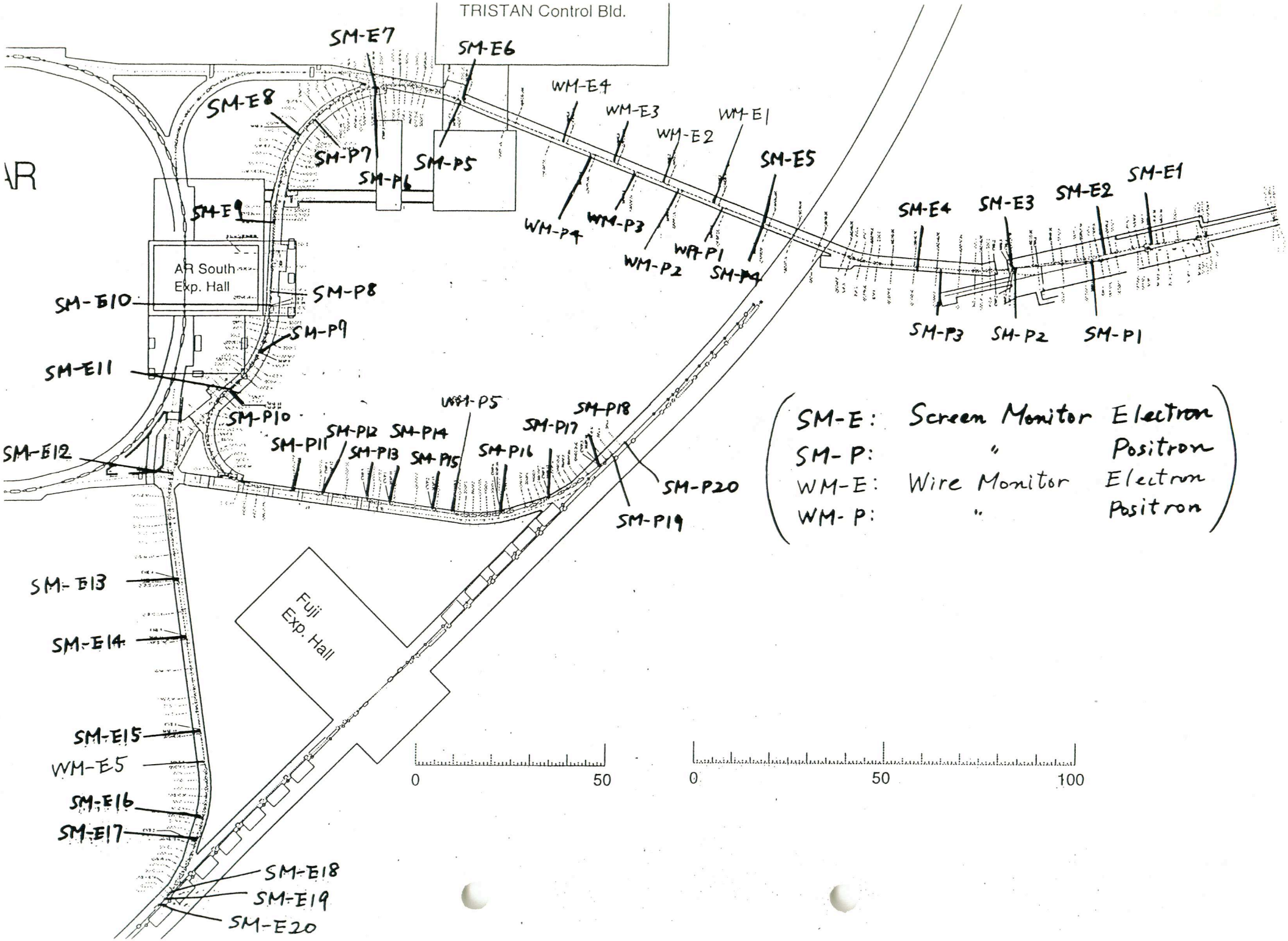
TRISTAN Control Bld.
AR South Exp. Hall
Fuji Exp. Hall
SM-E1
SM-E2
SM-E3
SM-E4
SM-E5
SM-E6
SM-E7
SM-E8
SM-E9
SM-E10
SM-E11
SM-E12
SM-E13
SM-E14
SM-E15
SM-E16
SM-E17
SM-E18
SM-E19
SM-E20
SM-P1
SM-P2
SM-P3
SM-P4
SM-P5
SM-P6
SM-P7
SM-P8
SM-P9
SM-P10
SM-P11
SM-P12
SM-P13
SM-P14
SM-P15
SM-P16
SM-P17
SM-P18
SM-P19
SM-P20
WM-E1
WM-E2
WM-E3
WM-E4
WM-E5
WM-P1
WM-P2
WM-P3
WM-P4
WM-P5
0
50
0
50
100
SM-E: Screen Monitor Electron
SM-P: " Positron
WM-E: Wire Monitor Electron
WM-P: " Positron

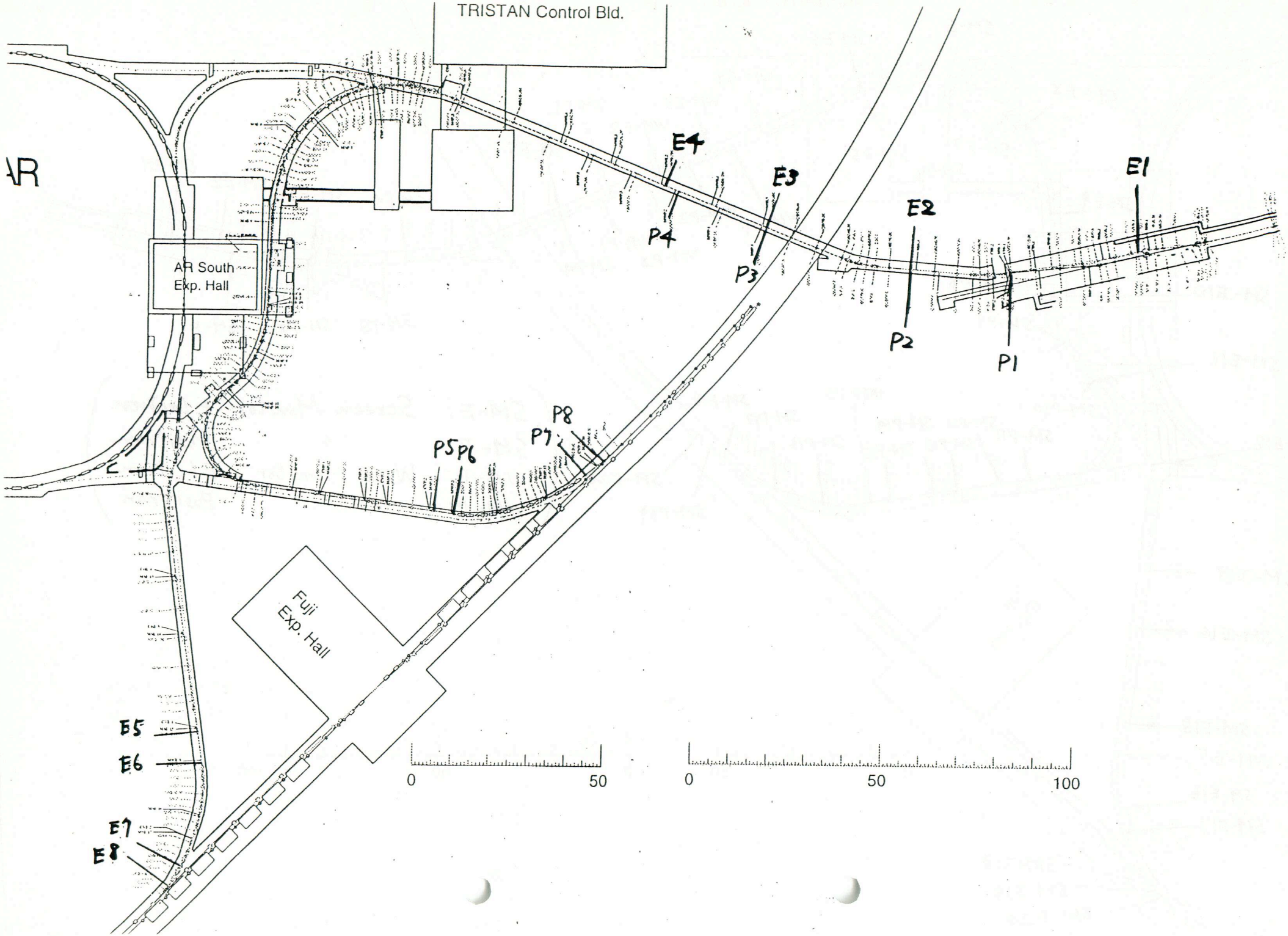
TRISTAN Control Bld.
AR
AR South
Exp. Hall
Fuji
Exp. Hall
E1
E2
E3
E4
E5
E6
E7
E8
P1
P2
P3
P4
P5
P6
P7
P8
0
50
0
50
100

BPM for KEKB/BT -Signal Distribution-

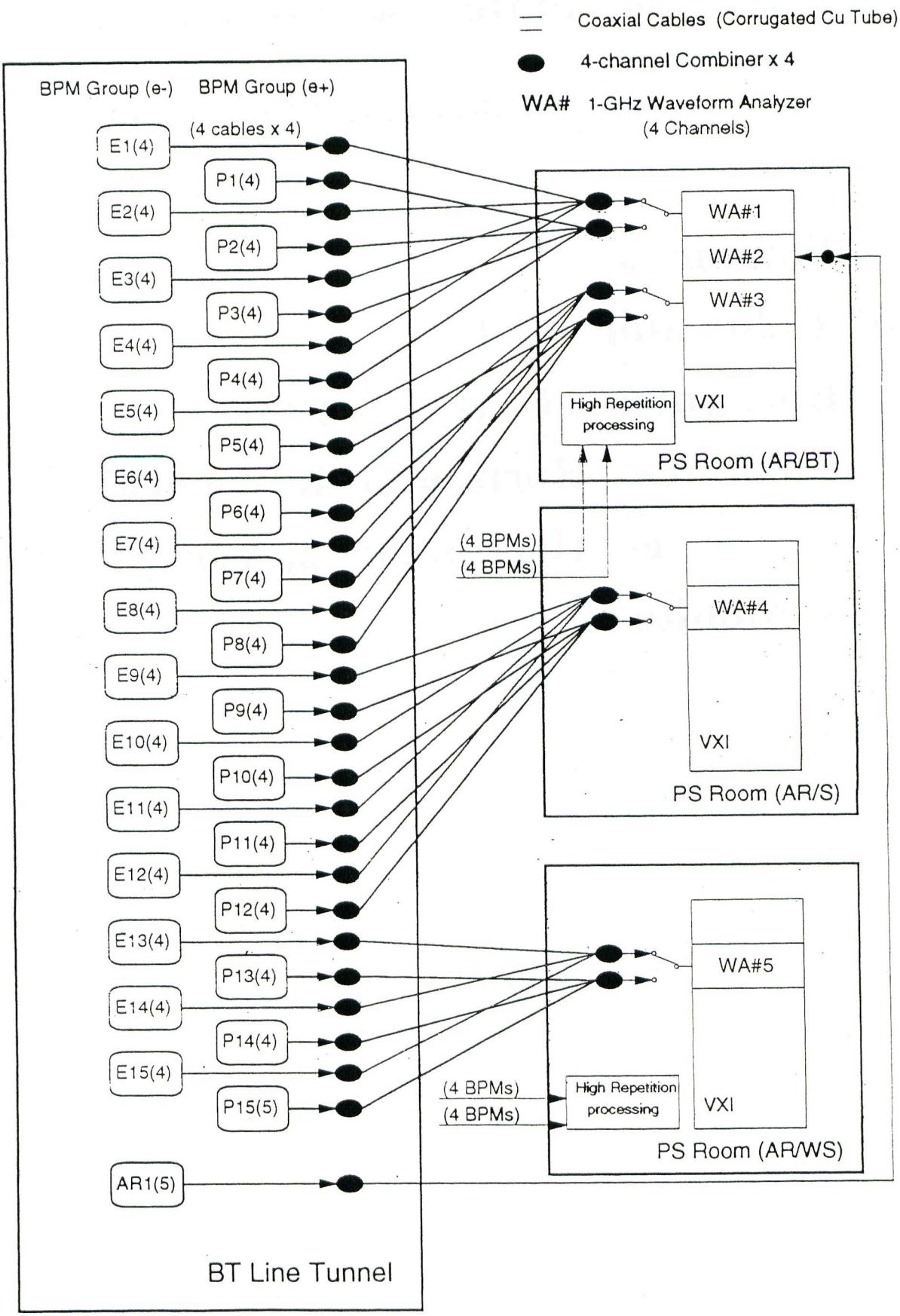

<Beam shutter>

# of Beam shutter 4 (e+:1 e-:3)

two of them are implemented.

<Collimator >

# of Collimator < 17

Horizontal 6 (e+:3 e-:3)

Slope (e+: Horizontal 4, Vertical 3

e-: Horizontal 2, Vertical 2)

<Loss Monitor>

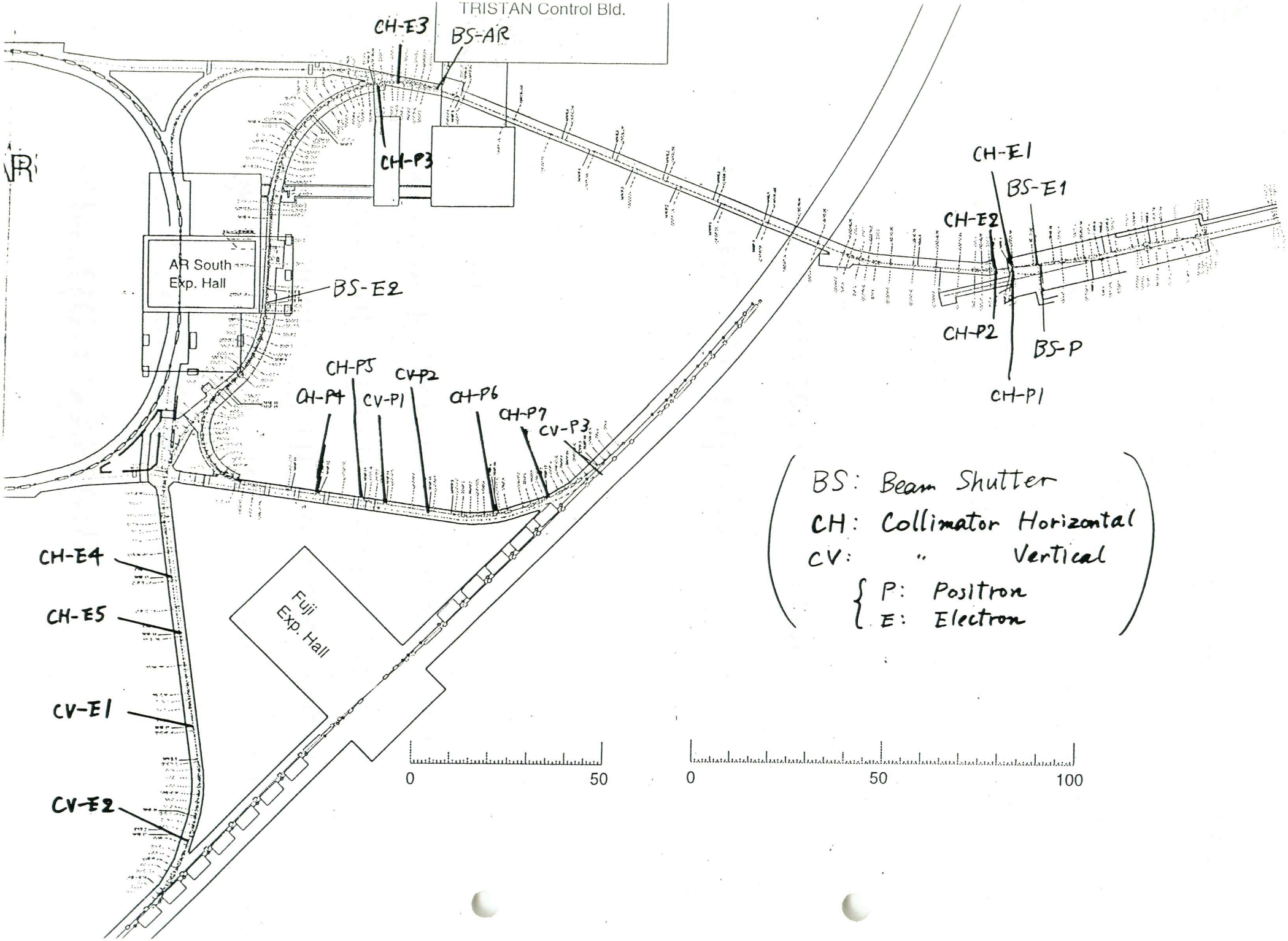
TRISTAN Control Bld.
CH-E3
BS-AR
CH-P3
AR South
Exp. Hall
BS-E2
CH-E1
BS-E1
CH-E2
CH-P2
BS-P
CH-P1
CH-P5
CV-P2
CH-P4
CV-P1
CH-P6
CH-P7
CV-P3
CH-E4
CH-E5
CV-E1
CV-E2
Fuji
Exp. Hall
0
50
0
50
100
BS: Beam Shutter
CH: Collimator Horizontal
CV: " Vertical
P: Positron
E: Electron

4:Injection System

Kicker System

- ◆Same type of TRISTAN AR injection system
- ◆Each of LER HER 6 Kicker Magnets
- ◆Peak of Magnetic Field ～ 500 Gauss
- ◆Three Kicker magnets are merged into one group

<Ceramic chamber>

1） Power Loss due to Eddy Current

Bench Test

B = 0.675 K Gauss

Frequency 50 Hz

Ceramic chamber coating thickness 2.5 μm 6 μm

Power Loss	Test Bench	Calculation
2.5 μm (W)	40W	65W
6 μm (W)	60W	120W

－>Much Less than Power Dissipation from the Beam

Kicker & Septum Magnet Location

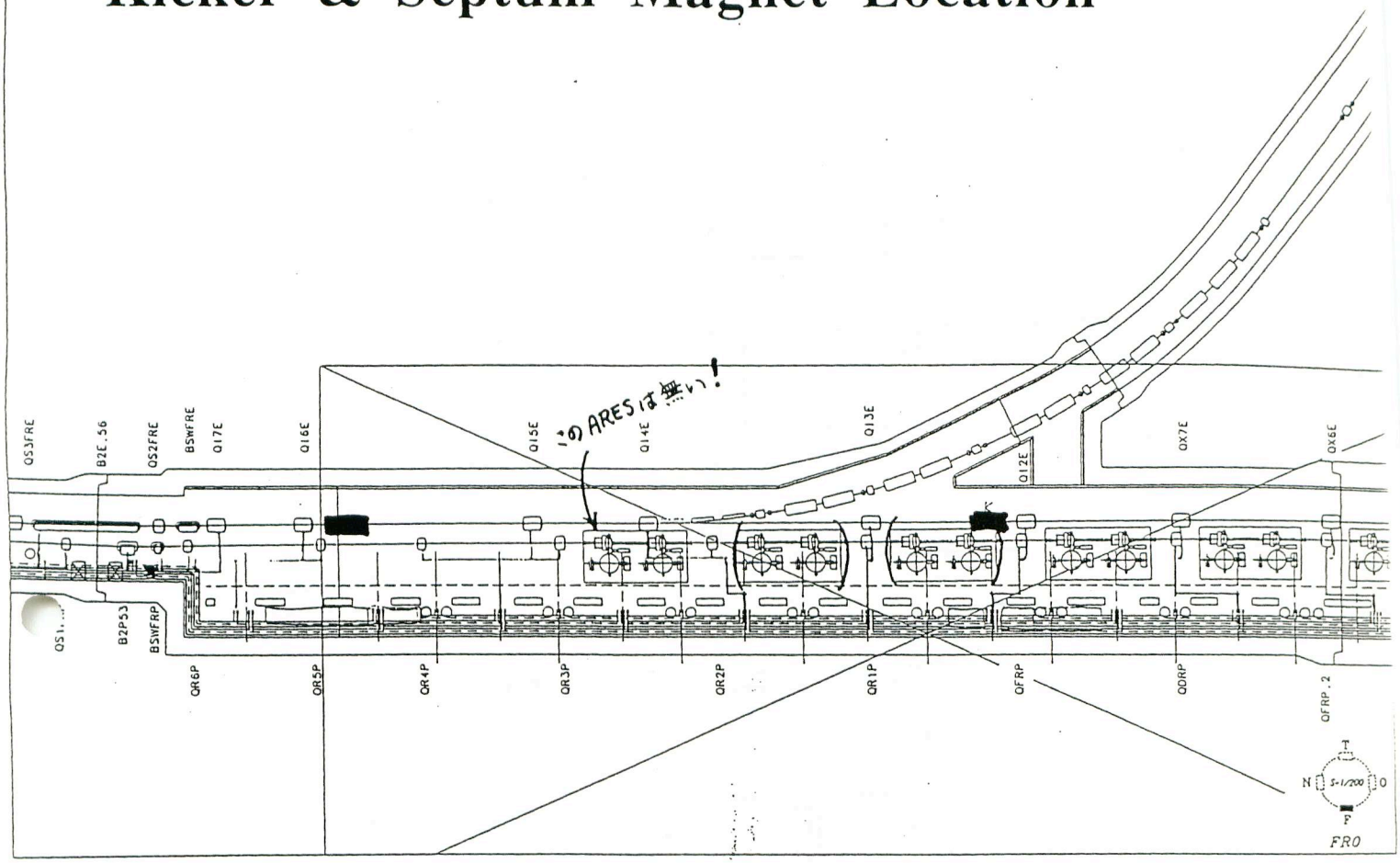

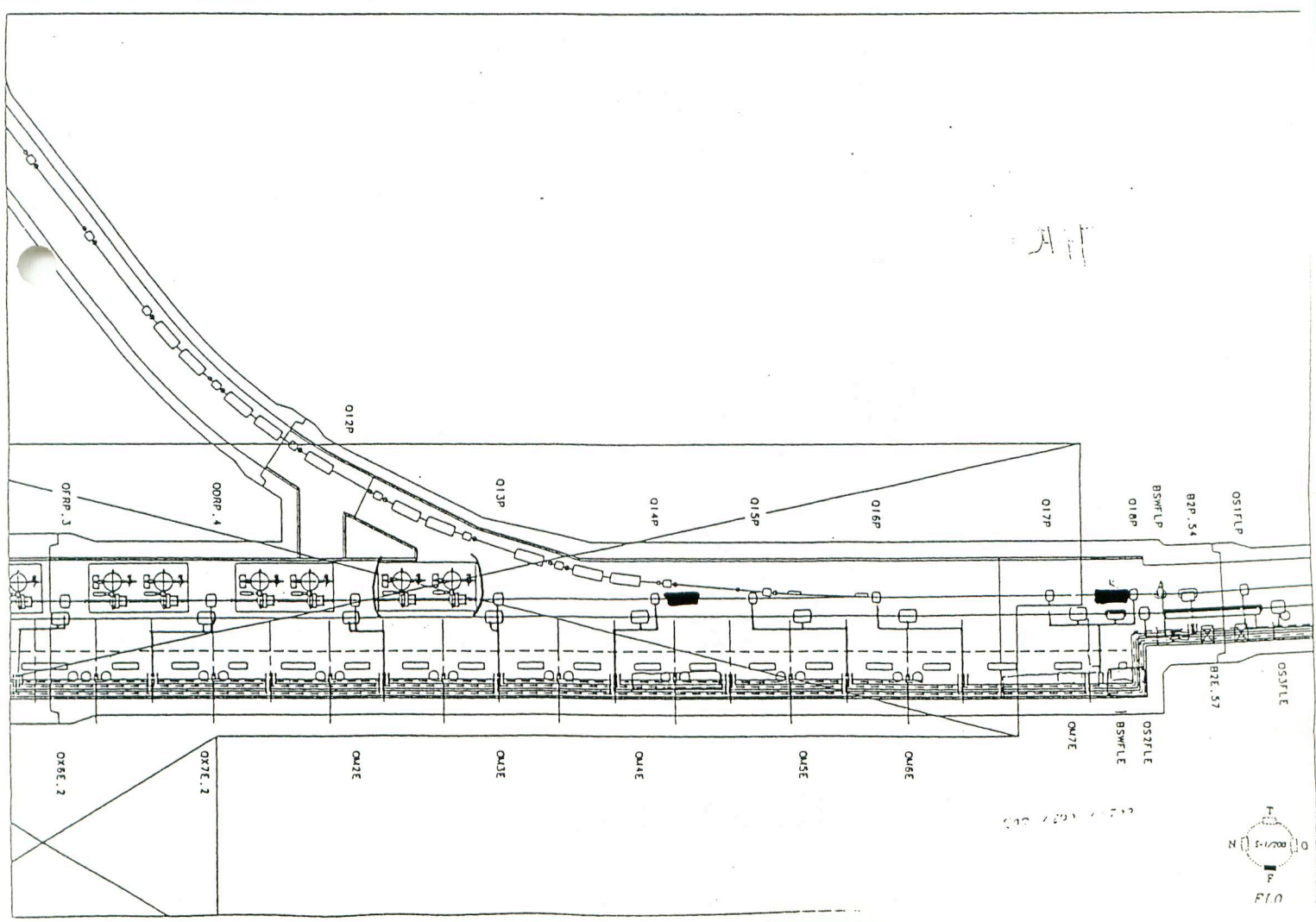

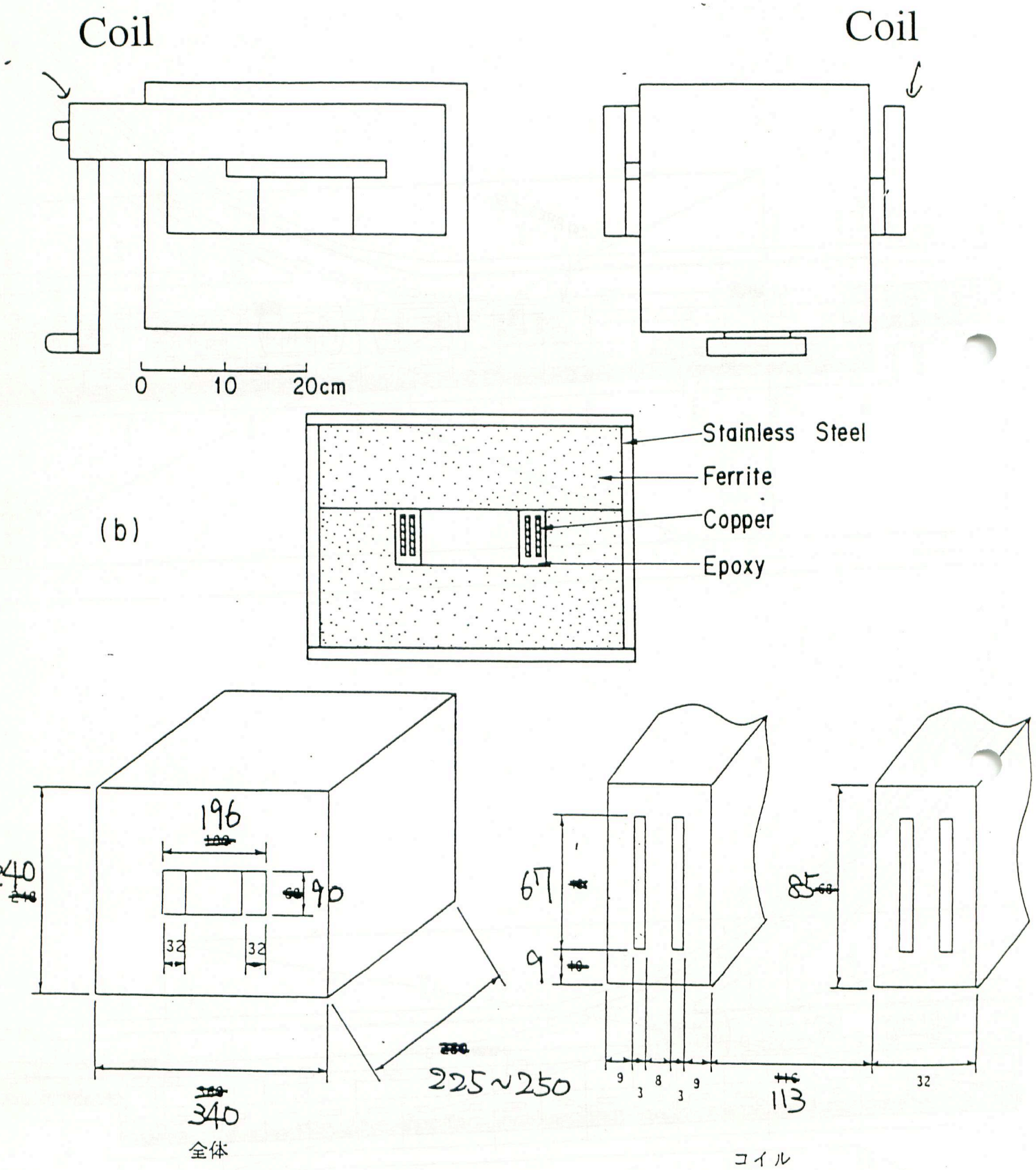

Kicker magnet

2） Power Dissipation due to Image Currents

Bunch Currents , Bunch Length

Total Current, Number of Bunch, Total Vc

Assumption

Power Dissipation $\propto$ (Bunch current) x (Bunch current)
x (# of Bunches) / (Bunch Length)
x (Accelerator circumference)

Parameters on AR Accelerator study

# of bunches	32 bunches
Total Current	400mA (Bunch Current 12.5mA)
Total Vc	2MV
Bunch Length	2.5～3cm
Power Dissipation	80W (2.5 μ m) 50W(6 μ m)

KEKB Parameters

# of bunches	5000 bunches
Total Current	2.6A (LER) (Bunch current 0.52mA)
	1.1A (HER) (Bunch current 0.22mA)
Bunch Length	4mm
Power Dissipation	1KW (2.5 μ m) 0.6KW(6 μ m) (LER)

-> Water Cooling

3) Ceramic chamberR & D 1 (LER)

Double Ceramic Structure(Type I)

No Local temperature rise

4) Ceramic chamberR & D 2 (HER)

Make holes at the ceramic chamber (Type II)

5) Metalize at the Cooling water part

Mn-Mo metalize -> Weak for Water

HER:W-Mn + Ni Metalize

LER:Ti (Activated metalize methode)

6) Ti Coating Uniformity

7) Others

Grind the chamber inner side

Flatness of the chamber inner side < 80 μm/cm

(Difference in level

at junction of ceramic & Flange) < 200 μm

NL-104-279

基記号公差（図中指示の無い寸法公差 指定が無ければmm）								
寸法区分	を超え以下	－ 0.5	0.5 6	6 30	30 120	120 315	315 1000	1000 2000
切り加工		±40%	±0.2	±0.5	±0.8	±1.2	±2.0	±3.0
曲げ、反り		±120%	±0.6	·	±1.1	±1.6	±2.8	±4.5
射出加工、変形 1箇所当たり		±100%	±0.35	±0.8	±1.1	±1%		

セ[illegible]：±2%（最小±0.3）

寸法はめっき、塗装前

記号	来歴	年月日	訂正	審査	作番	
					P51005	

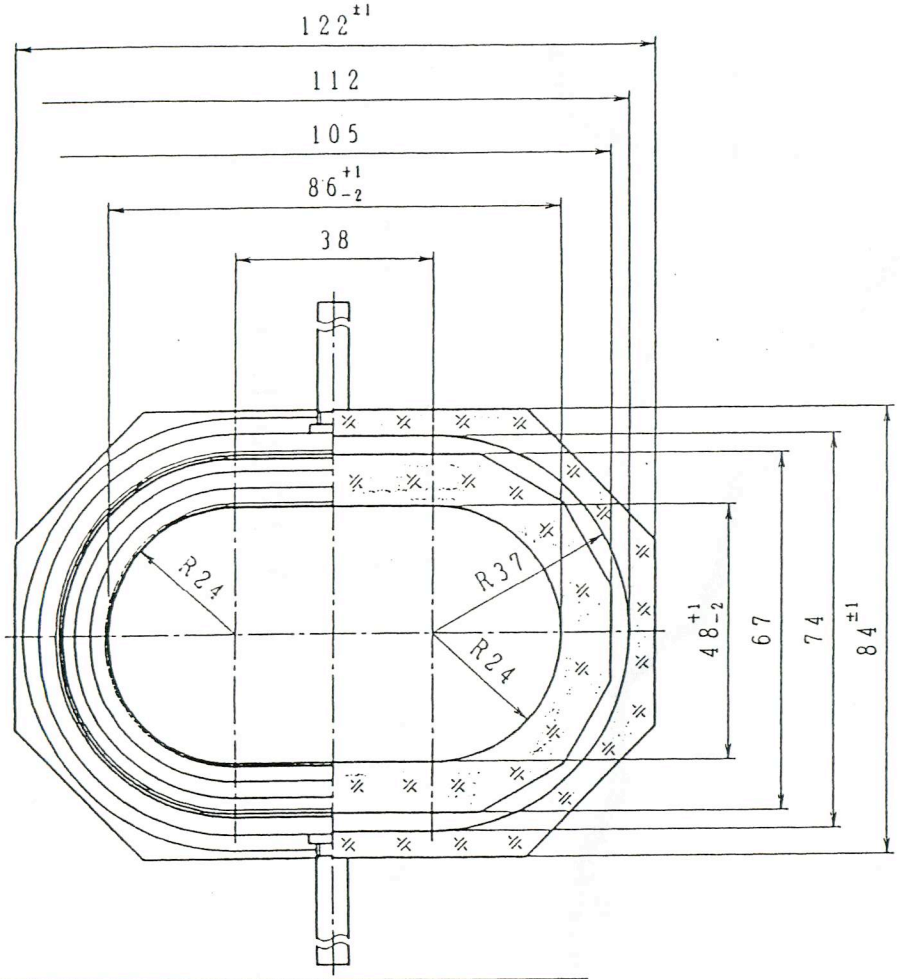

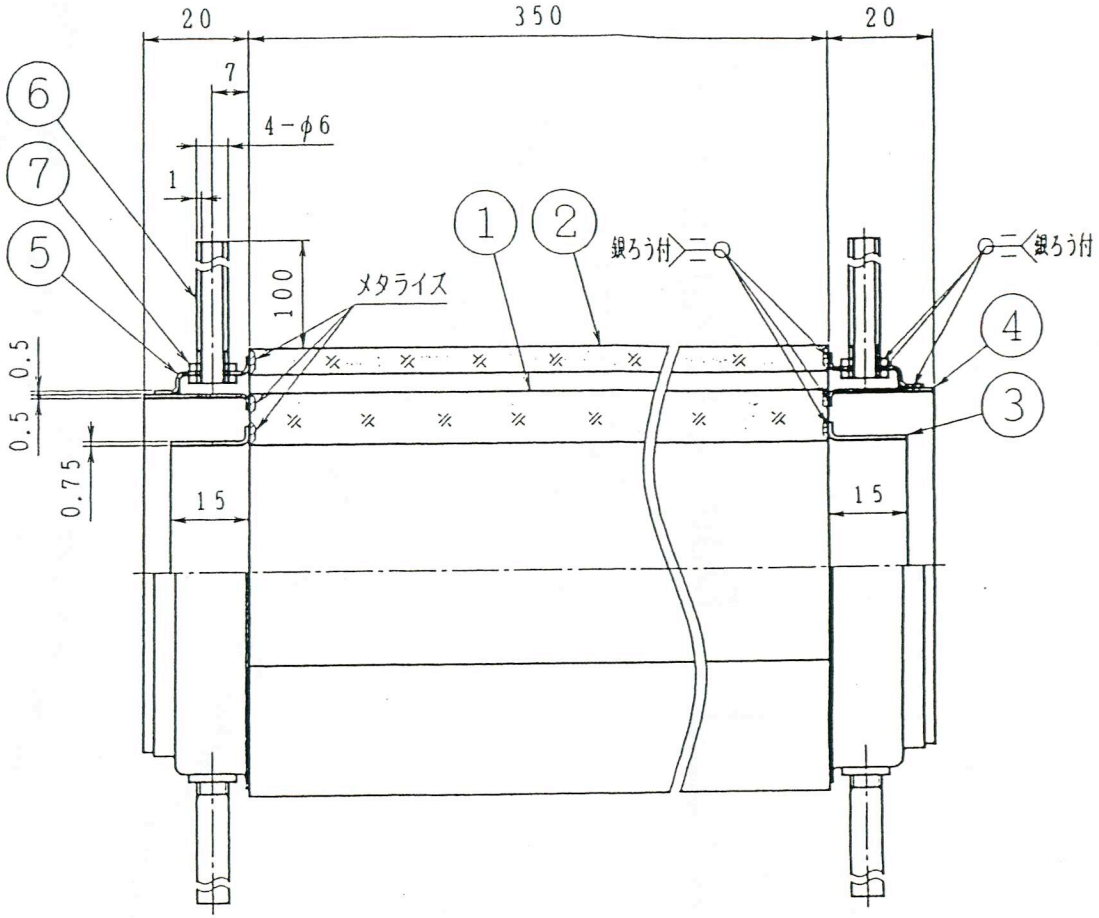

番号	部品名	材質	員数	備考
①	碍子	アルミナセラミック	1	色調：白
②	碍子	アルミナセラミック	1	色調：白
③	フランジ	Fe−Ni−Co	2	Niめっき付
④	キャップ	C1020	2	Niめっき付
⑤	キャップ	C1020	2	Niめっき付
⑥	パイプ	SUS304	4	Niめっき付
⑦	ナット	C1020	8	Niめっき付

仕様

1. 気密性：1×10^{-9} atm・cc/sec以下（於Heリークディテクター）
2. 耐圧力：10kgf/cm² G×10分間（水圧）
   番号⑥パイプにはスウェジロックを取付けても可とする。
3. セラミックのろう付は活性ろう付法による。

御承認願図

1	1		I.P			TOODTTAB			
	品番	片番	部品名	資材コード	材質	材料	素材寸法	素材	仕上
					摘要		納明備考	重量(Kg)	
	PD01	備付		三角法	製図尺度	1:1	I.P		
	CAD				原図縮尺	:	絶縁管 水冷ジャケット試作		
	第1								
	設計	長山	97.05.13	日立原町電子工業	NL-104-279				
	審査	〃	〃						
B	A	承認	〃						

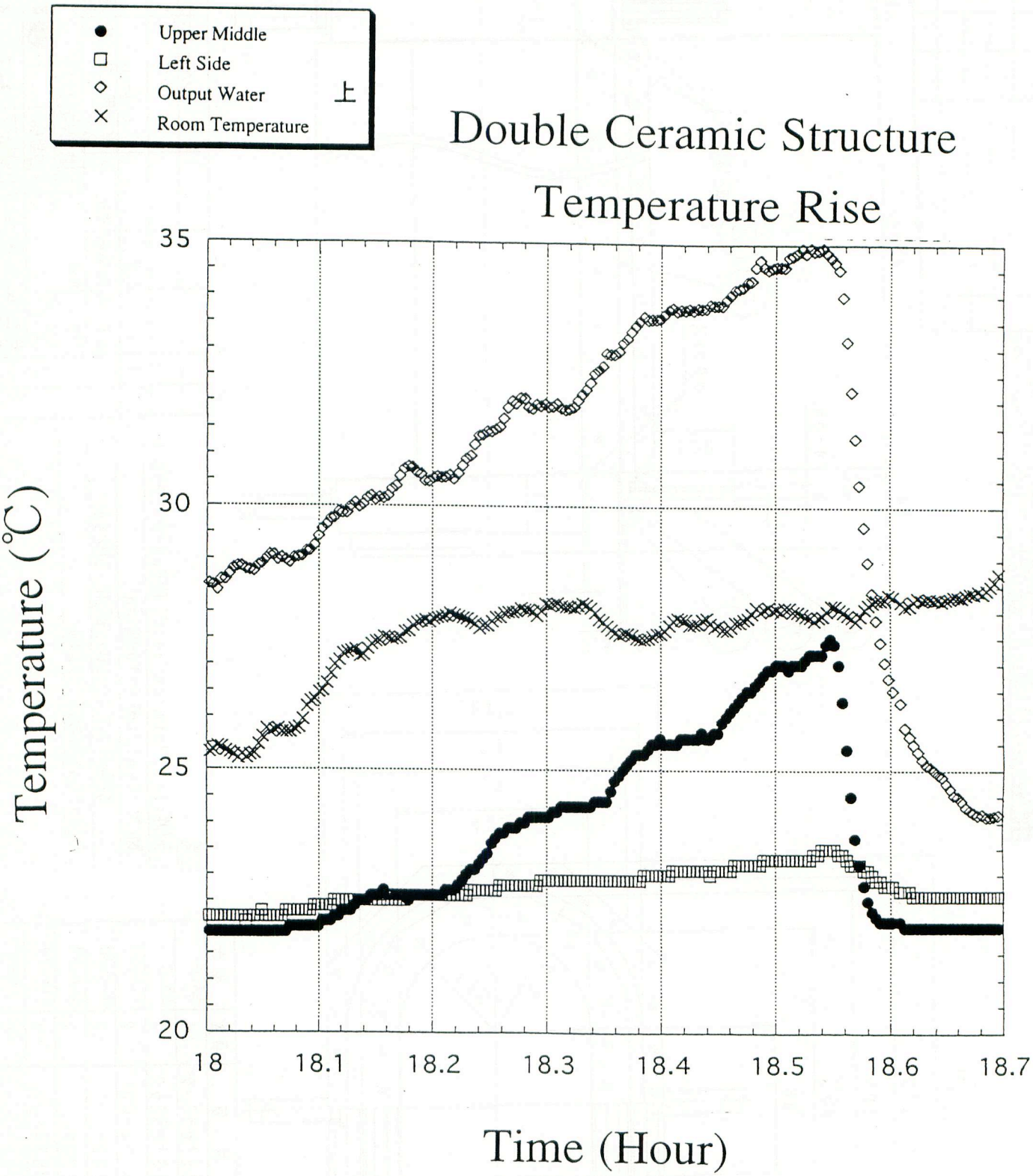
Upper Middle
Left Side
Output Water
Room Temperature
上
Double Ceramic Structure
Temperature Rise
35
30
25
20
Temperature (°C)
18
18.1
18.2
18.3
18.4
18.5
18.6
18.7
Time (Hour)

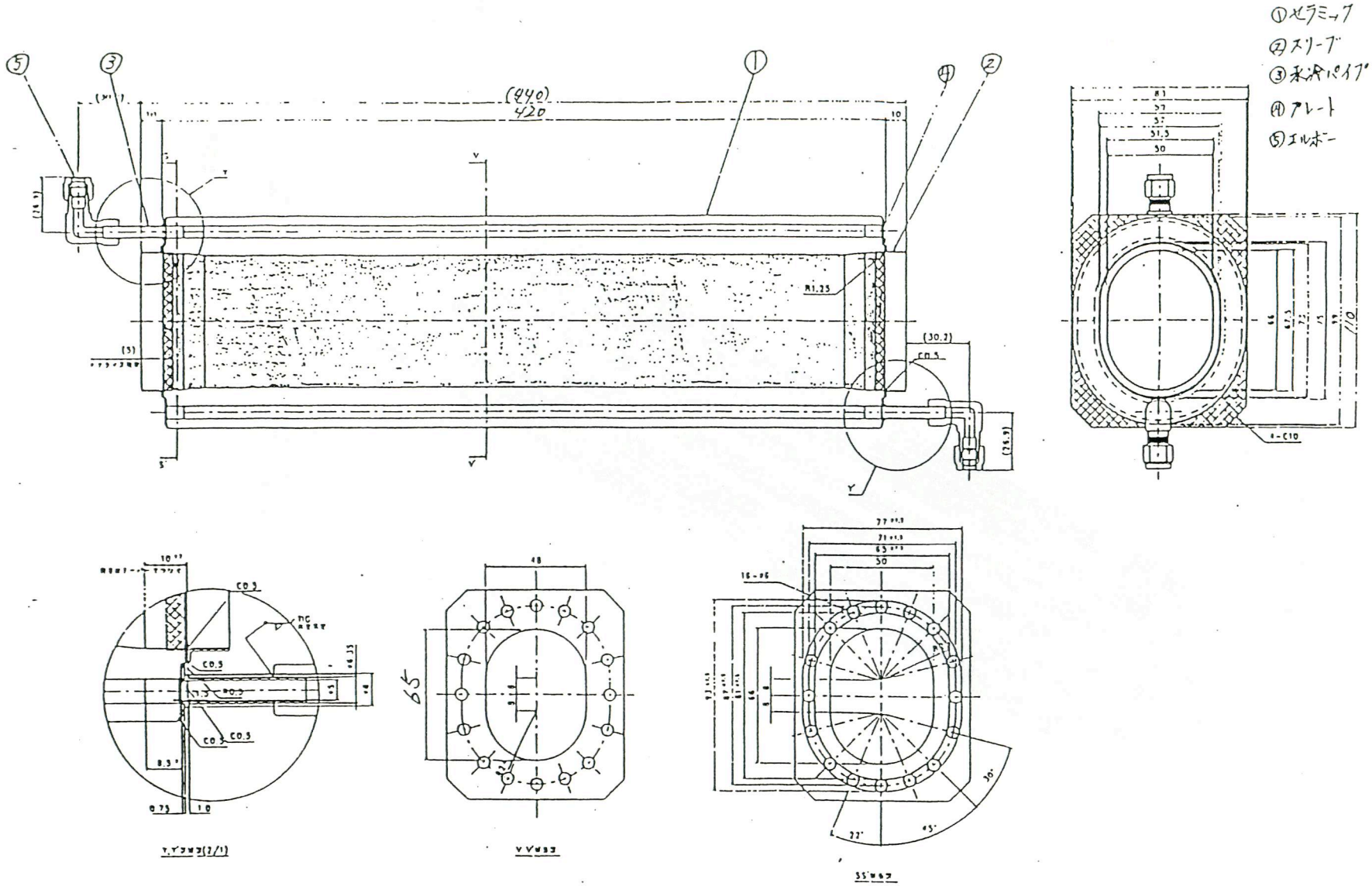

1. セラミックチェンバー概要

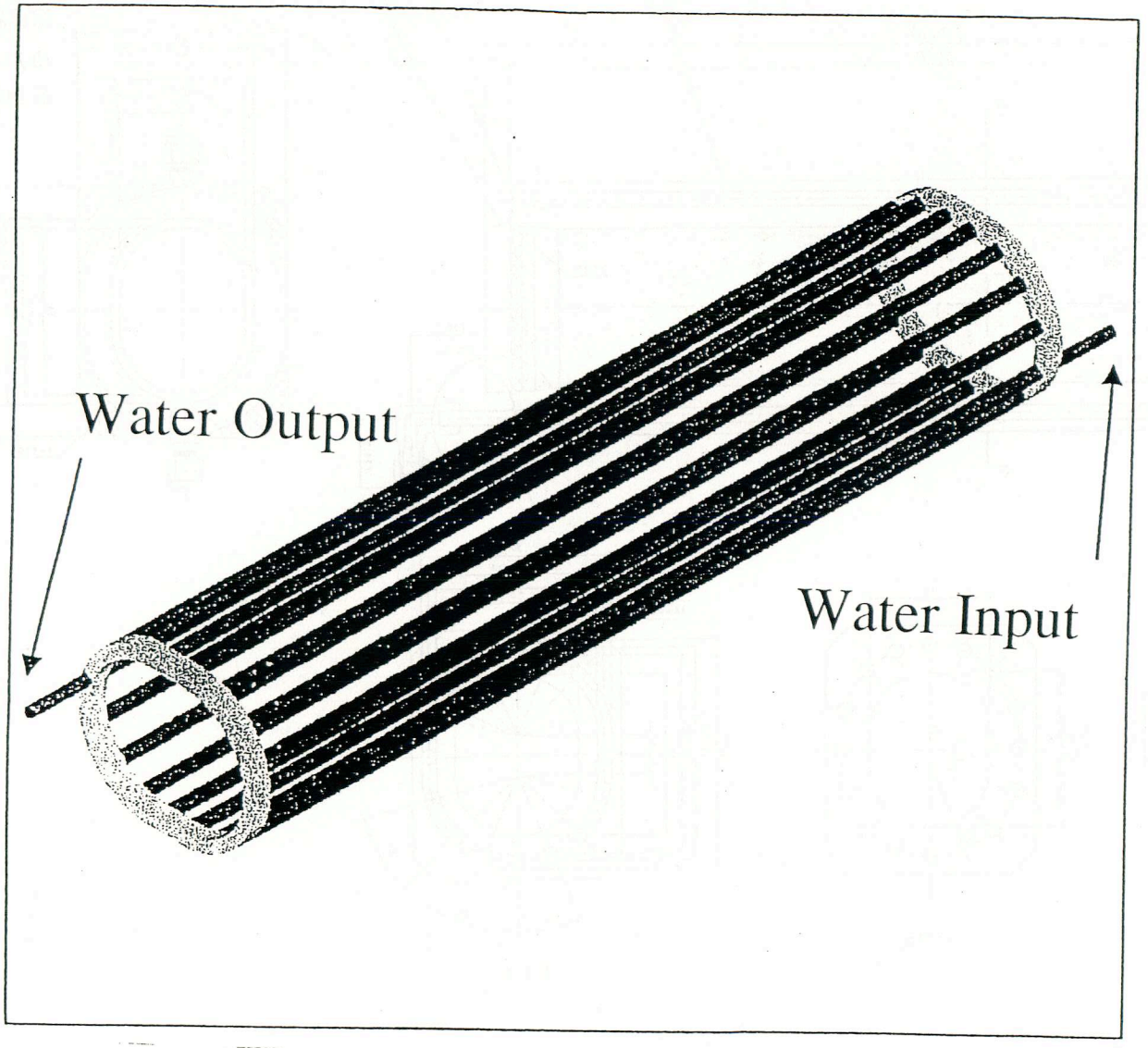

STAR D

PROSTAR 3.00

28-OCT-97
VIEW
1.000
1.000
1.000
ANGLE
.000
DISTANCE
206.278
CENTER
.000
.000
210.000
EHIDDEN PLOT
LIGHT SOURCE
1 .58 .58 .58

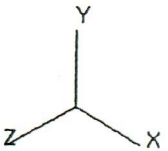

Prottype Ceramic chamber (Type II)

Cooling Water configuration

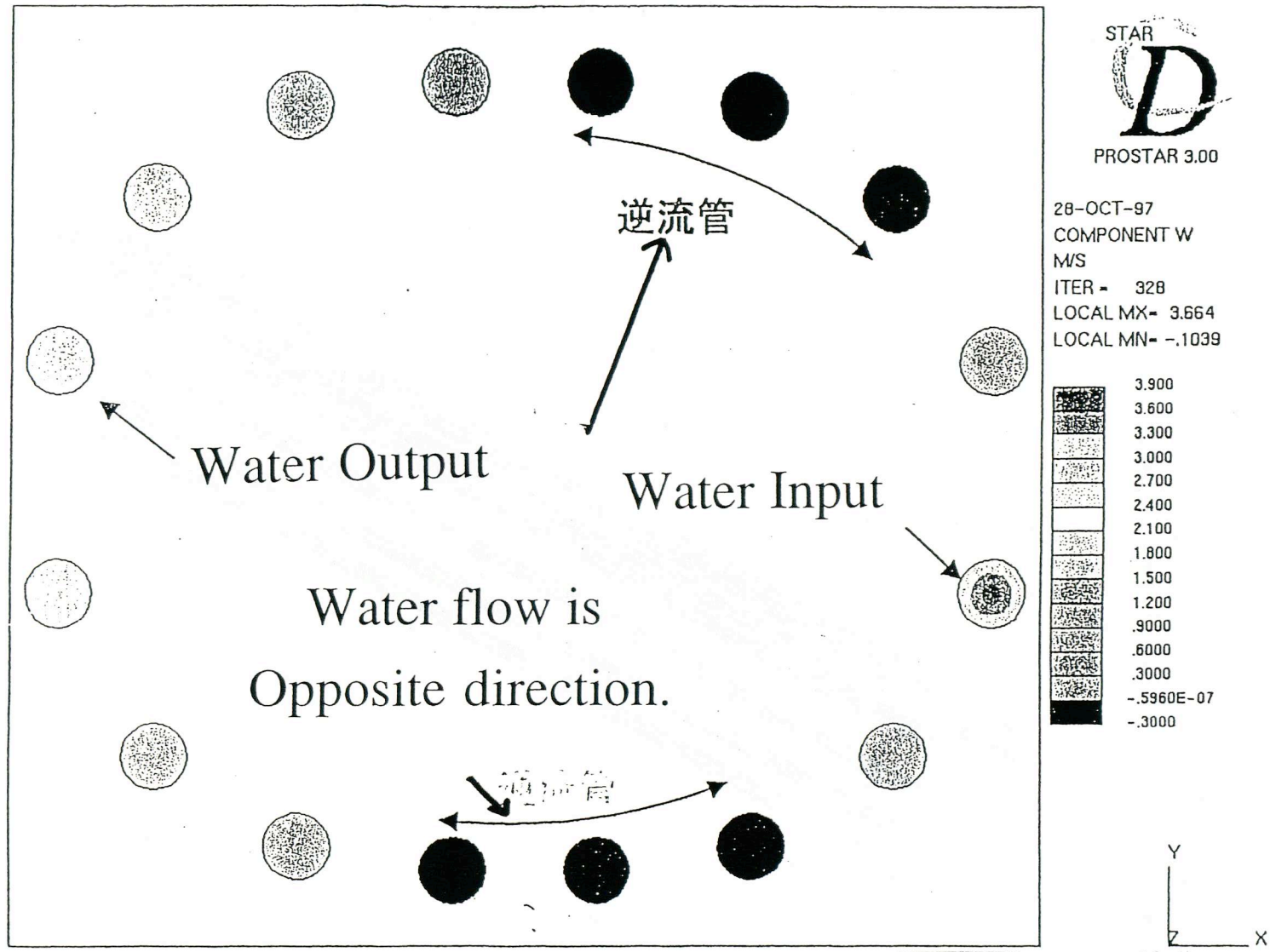

Prottype Ceramic chamber (Type II)

Cooling Water configuration

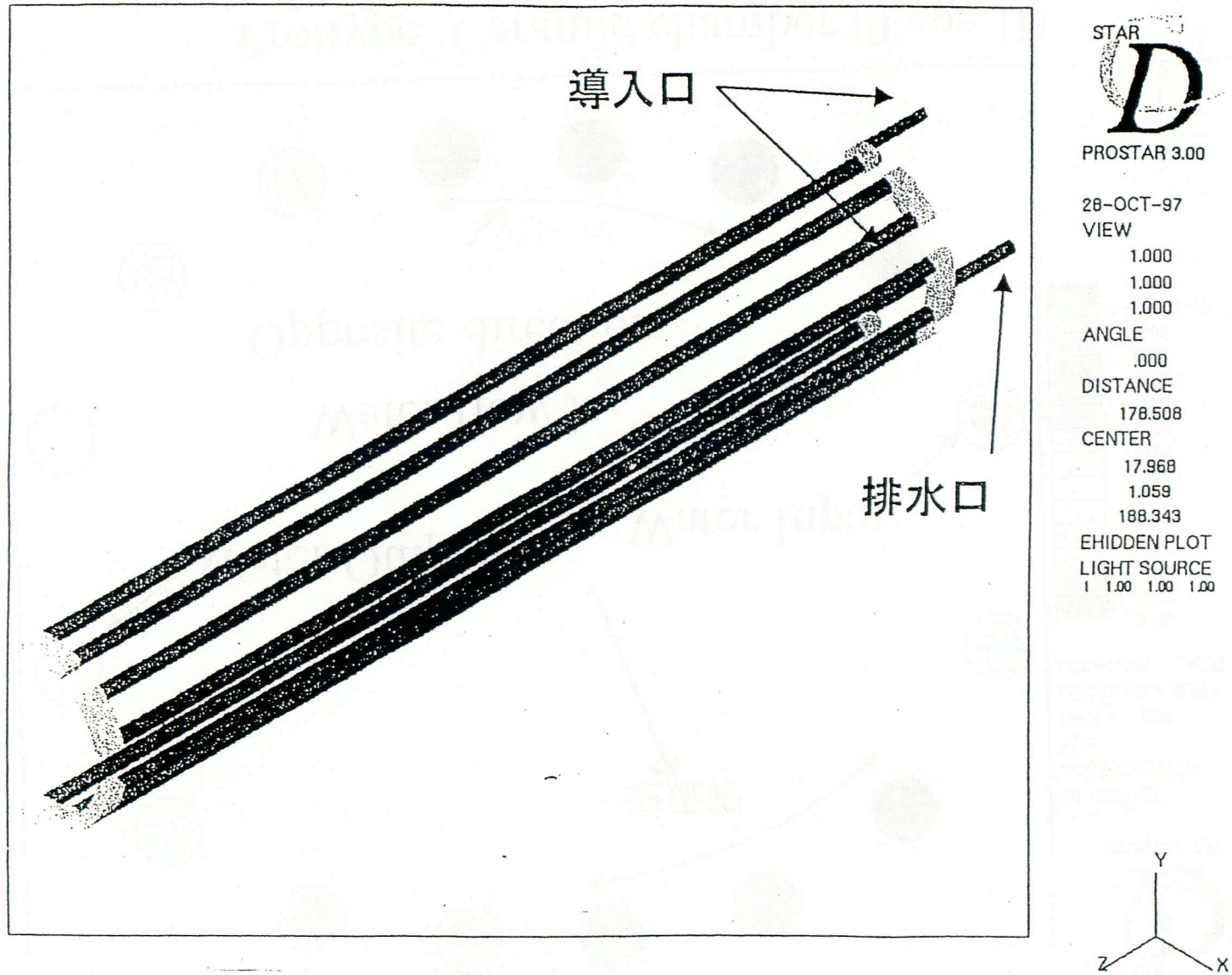

New Type (Type II)

Cooling Water configuration

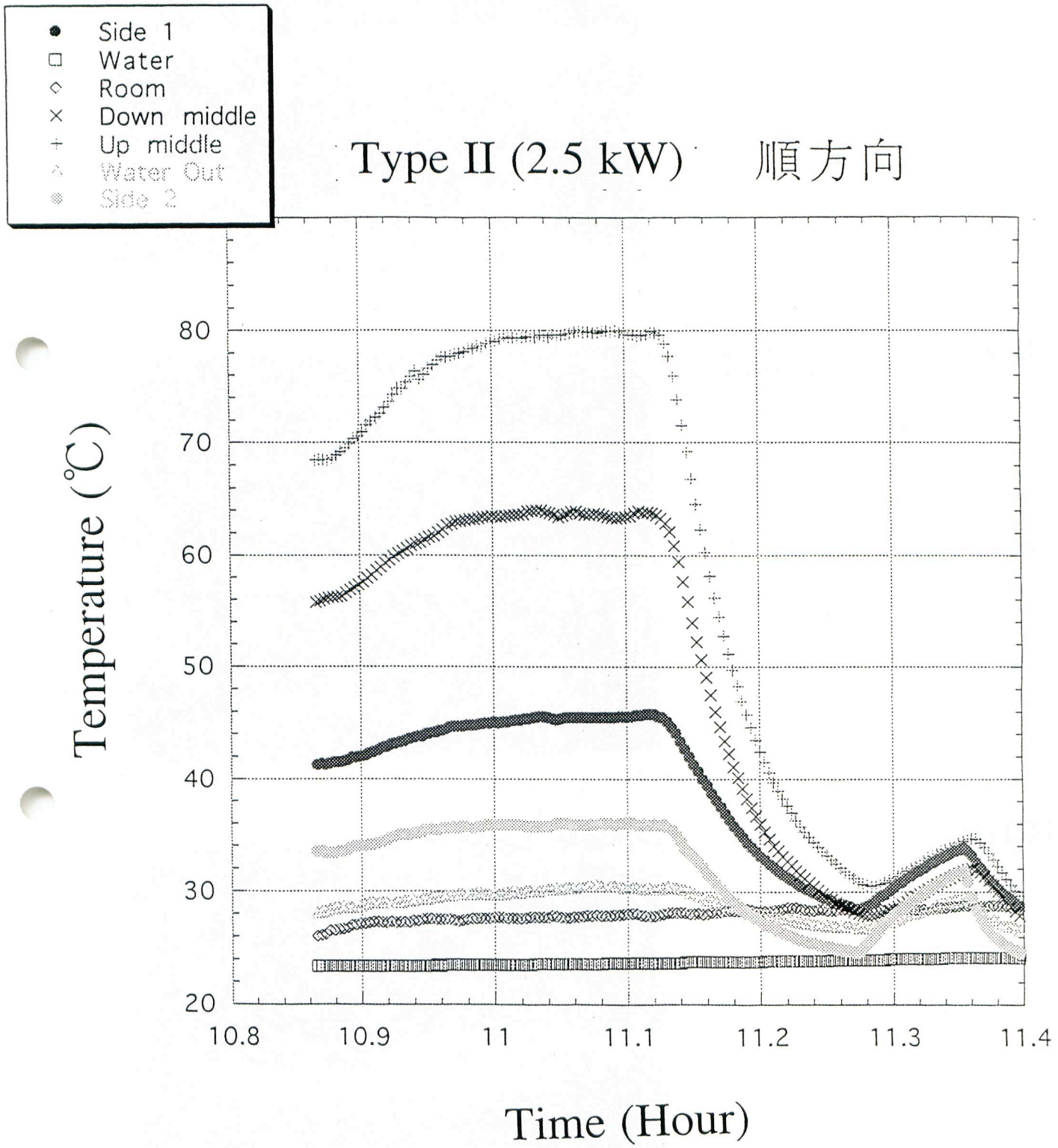
Side 1
Water
Room
Down middle
Up middle
Water Out
Side 2
Type II (2.5 kW)
順方向
Temperature (℃)
80
70
60
50
40
30
20
10.8
10.9
11
11.1
11.2
11.3
11.4
Time (Hour)

Chamber No.4

Sample No.41C

41-C

Sample No.42C

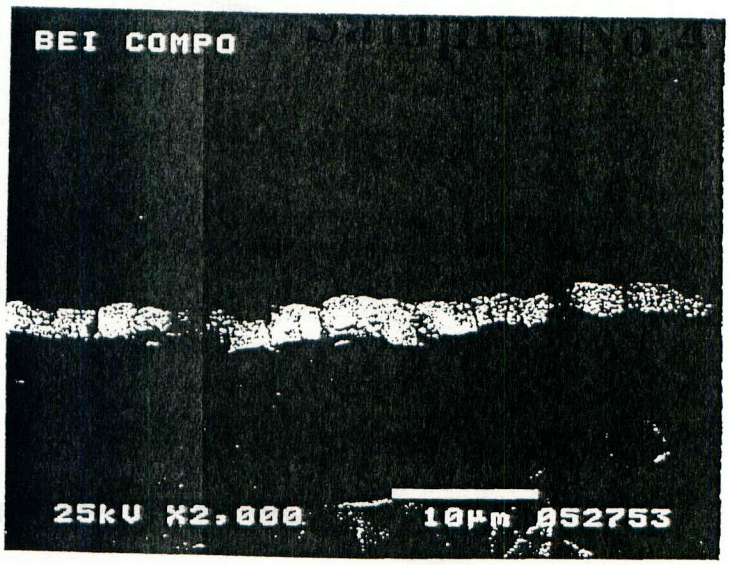

42-C

Sample No.43C

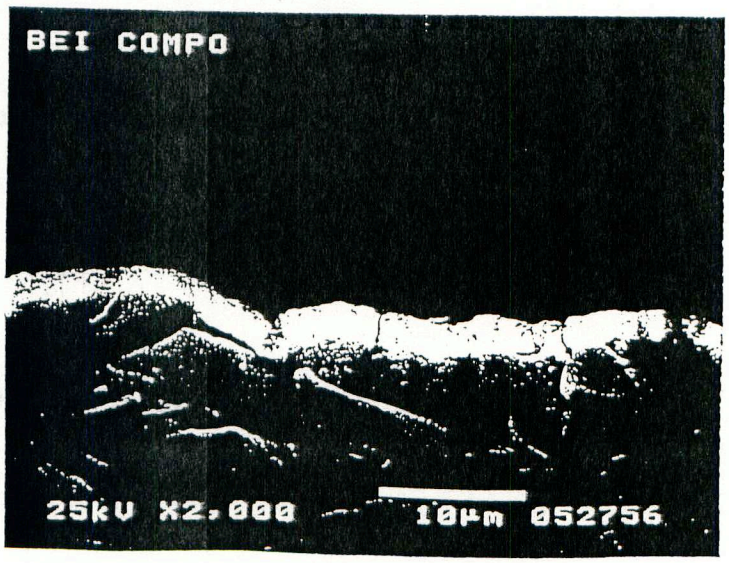

43-C

Picture of Ti coating

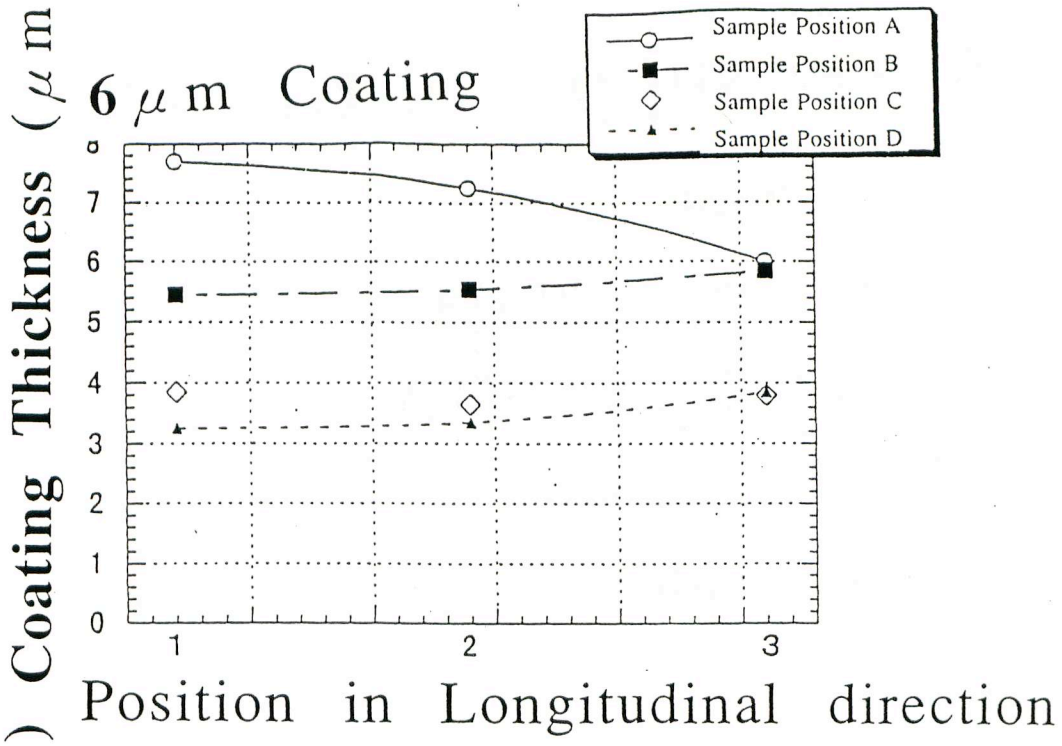
6 μm Coating
Sample Position A
Sample Position B
Sample Position C
Sample Position D
Coating Thickness (μm)
0
1
2
3
4
5
6
7
8
1
2
3
Position in Longitudinal direction

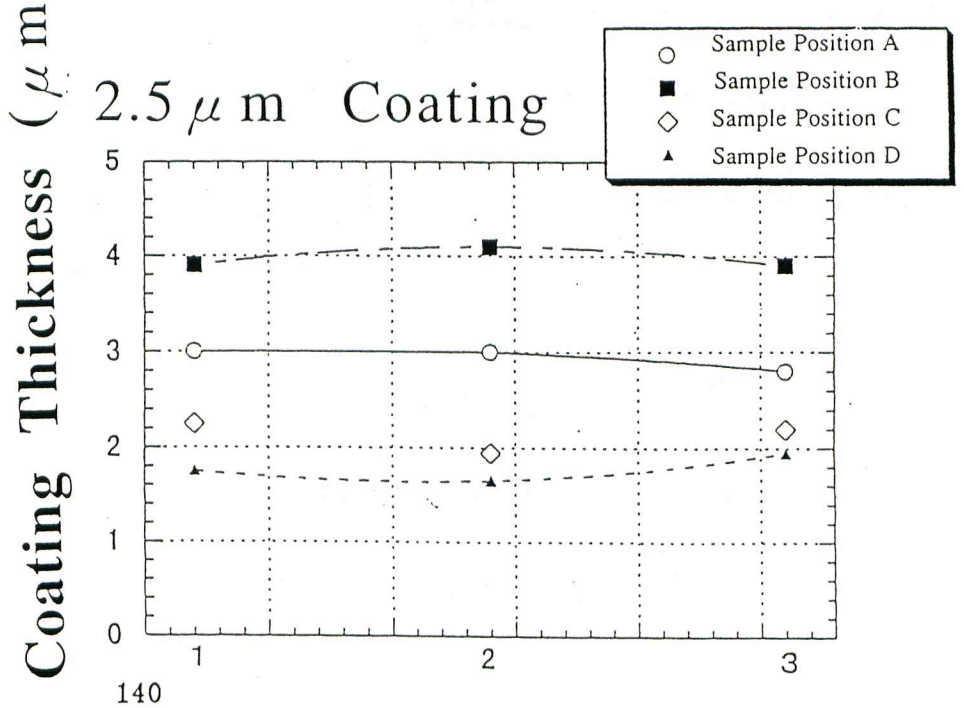
2.5 μm Coating
Sample Position A
Sample Position B
Sample Position C
Sample Position D
Coating Thickness (μm)
0
1
2
3
4
5
1
2
3

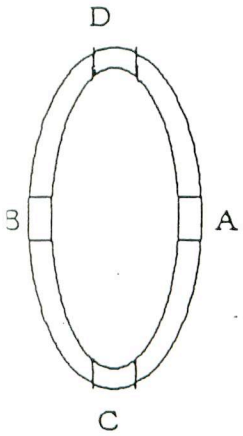
D
B
A
C

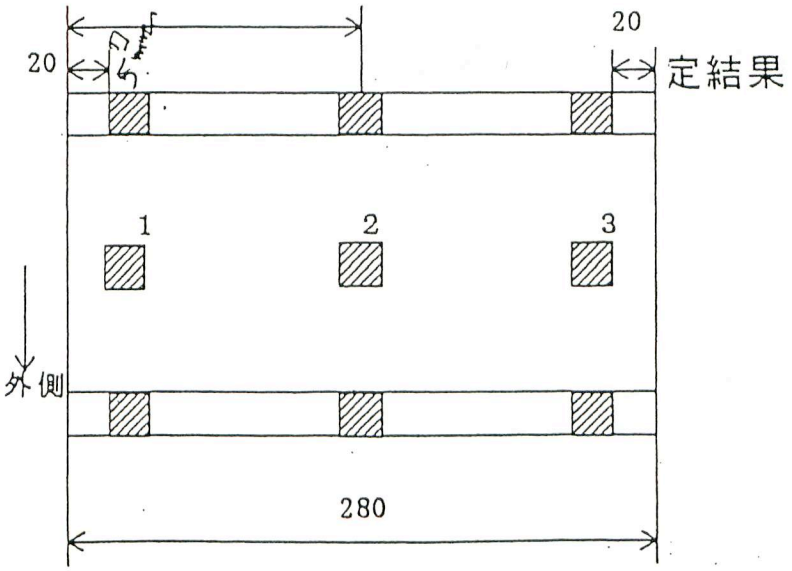
140
20
20
定結果
1
2
3
外側
280

<Power supply of Kicker System>

1) Specification

Max Current 2000A

Max Voltage ~35KV

Use Thyratron

Pulse width ~ 2 μ sec

Main part in Building D7 & D8

Thyratoron Part Subtunnel

Matching Box Below Kicker magnets

Resemblance of pulse shape

in the 10~100 % of Max current < 1%

between 6 kicker magnets <3%

Pulse shape No undershoot

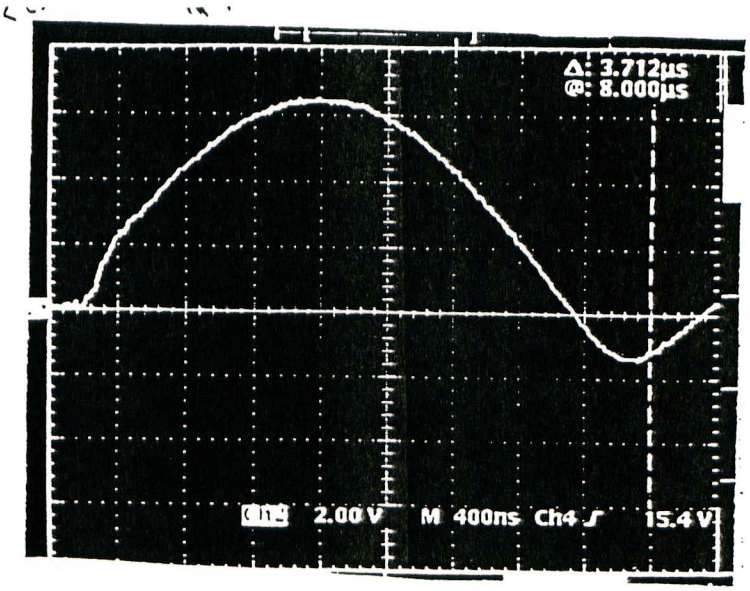

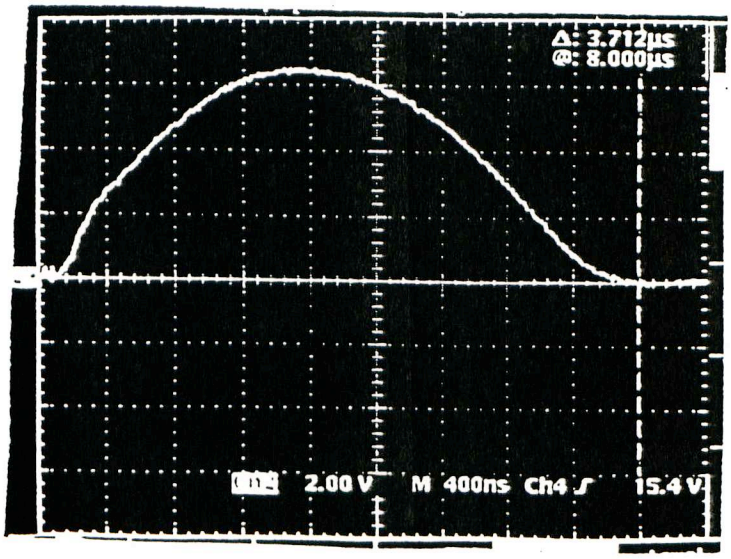

Output Current pulse shape