Masks and Dumps

K. Satoh

KEKB Accelerator Review
Mar. 06, 1998

Masks

Restrict apertures
to protect BELLE from halo particles,
and to localize paticle loss.

Phase space is restricted by
a set of four masks.

Each set of masks spans 2 normal cells
in the arc.

Horizontal:
Four masks are inserted
from inside the ring.

Vertical:
Two pairs of masks

Each ring has two set of masks
in both planes.

Main set is installed
in the first arc quadrant
after the injection section.

The second set is prepared
to scrape the particles
scattered at the main masks.

Mask is movable, and cooled by water.

Geometry of the mask
should be considered
from the impedance point of view.
(Loss parameters, resonances)

The mask design has not
finalized.

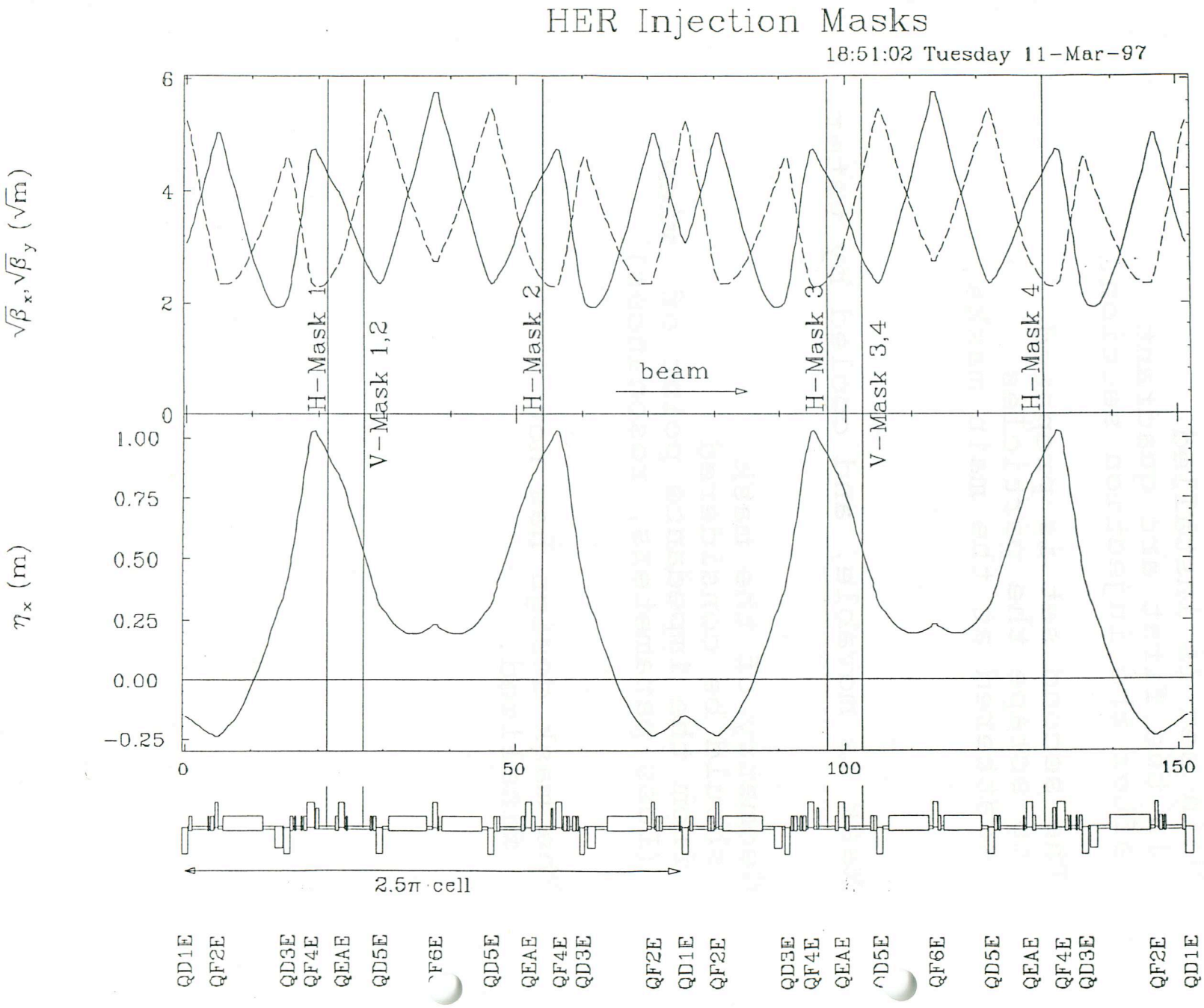
HER Injection Masks
18:51:02 Tuesday 11-Mar-97
$\sqrt{\beta_x}, \sqrt{\beta_y}$ ($\sqrt{m}$)
η_x (m)
H-Mask 1
V-Mask 1,2
H-Mask 2
beam
H-Mask 3
V-Mask 3,4
H-Mask 4
2.5π cell
QD1E QF2E QD3E QF4E QEAE QD5E QF6E QD5E QEAE QF4E QD3E QF2E QD1E QF2E QD3E QF4E QEAE QD5E QF6E QD5E QEAE QF4E QD3E QF2E QD1E

HER Horizontal Phase Space at Mask 4.

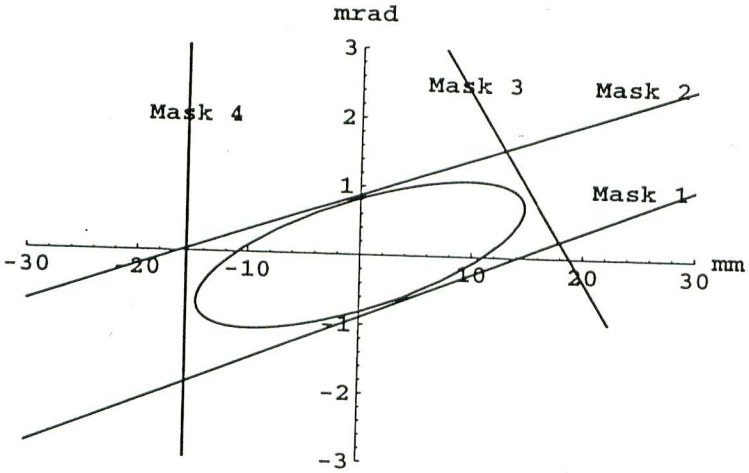

HER Vertical Phase Space at Mask 4.

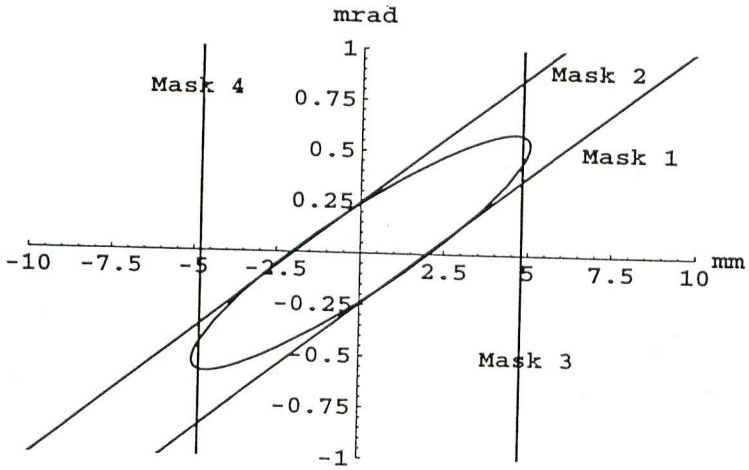

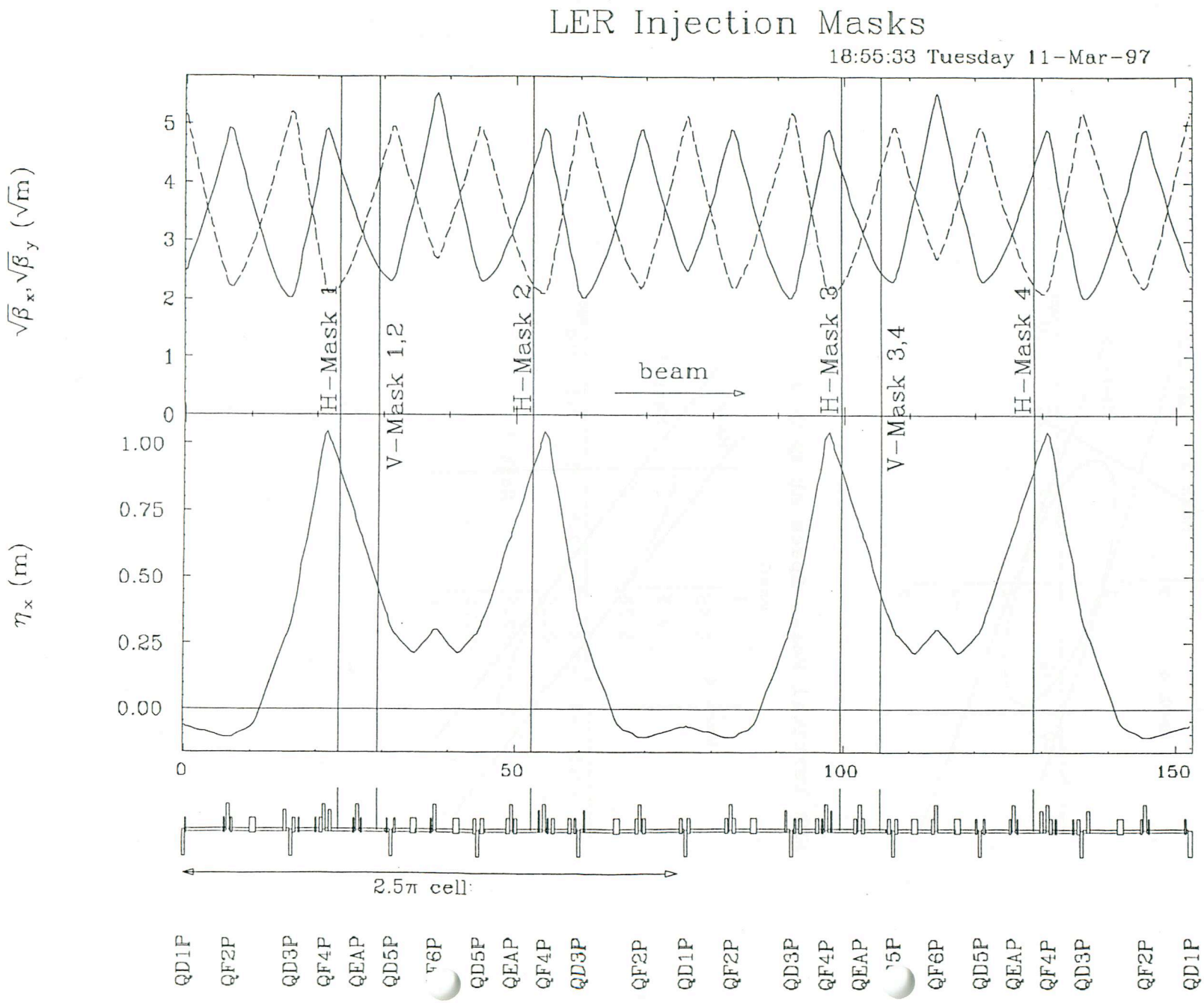
LER Injection Masks
18:55:33 Tuesday 11-Mar-97
$\sqrt{\beta_x}, \sqrt{\beta_y}$ ($\sqrt{m}$)
η_x (m)
H-Mask 1
V-Mask 1,2
H-Mask 2
beam
H-Mask 3
V-Mask 3,4
H-Mask 4
2.5π cell
QD1P QF2P QD3P QF4P QEAP QD5P QF6P QD5P QEAP QF4P QD3P QF2P QD1P QF2P QD3P QF4P QEAP QF5P QF6P QD5P QEAP QF4P QD3P QF2P QD1P

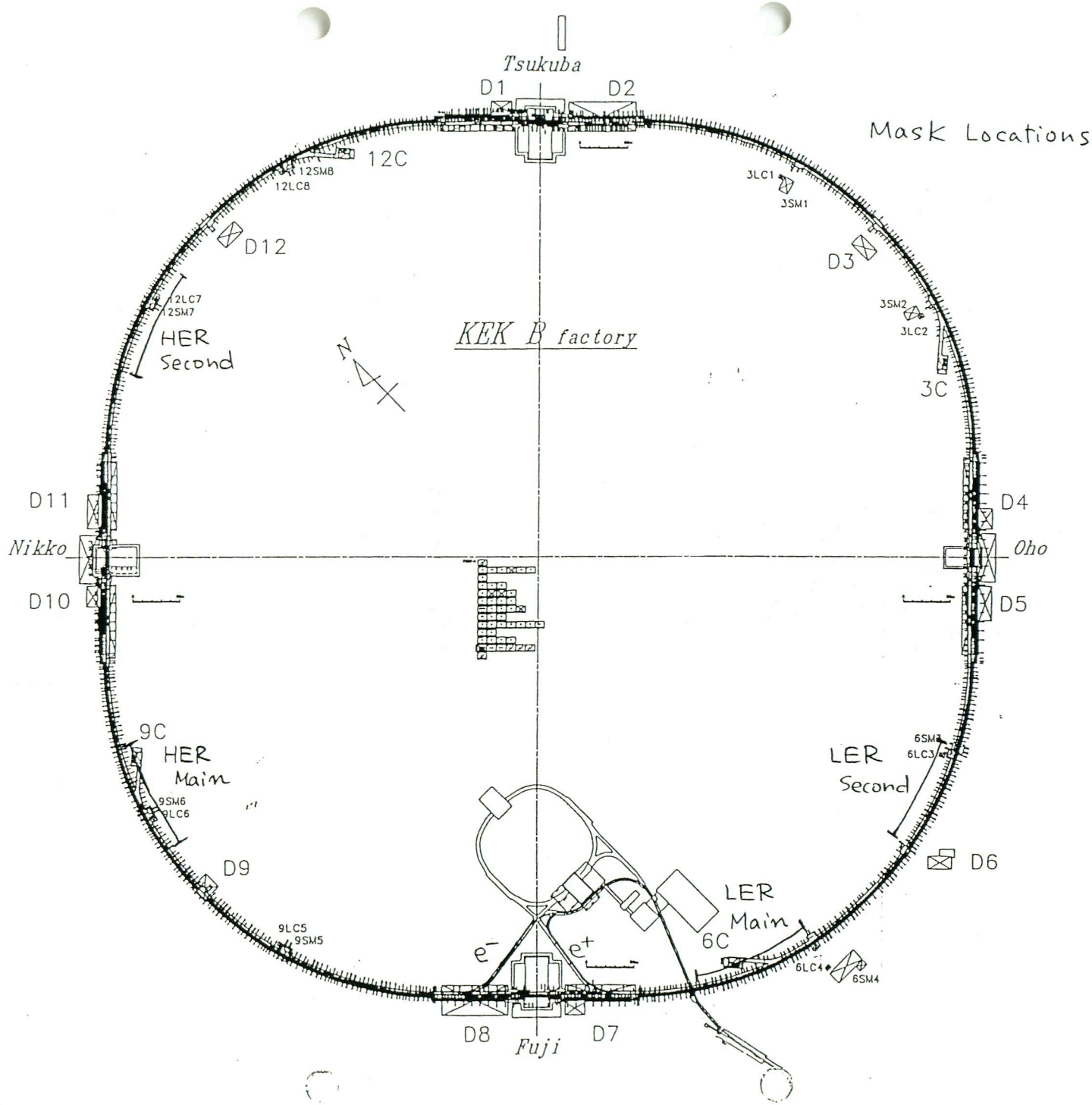
Mask Locations
KEK B factory
Tsukuba
Fuji
Nikko
Oho
D1
D2
D3
D4
D5
D6
D7
D8
D9
D10
D11
D12
12C
12SM8
12LC8
12LC7
12SM7
HER
Second
3LC1
3SM1
3SM2
3LC2
3C
9C
HER
Main
9SM6
9LC6
9LC5
9SM5
6SM3
6LC3
LER
Second
LER
Main
6C
6LC4
6SM4
e⁻
e⁺
N

LER Horizontal Mask

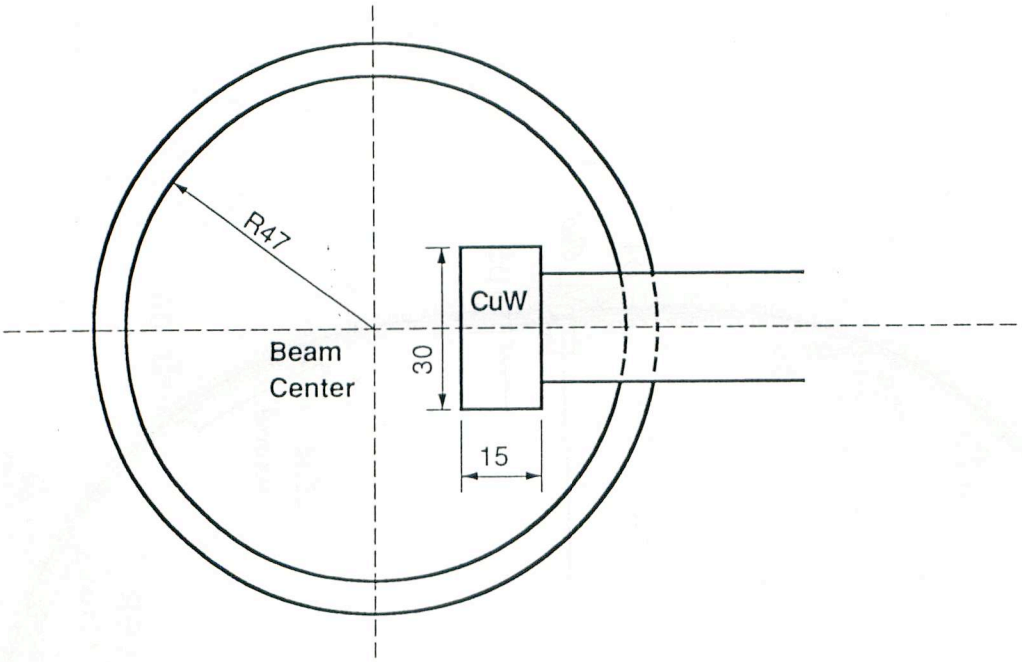

MaskLh2a.cad

LER Horizontal Mask

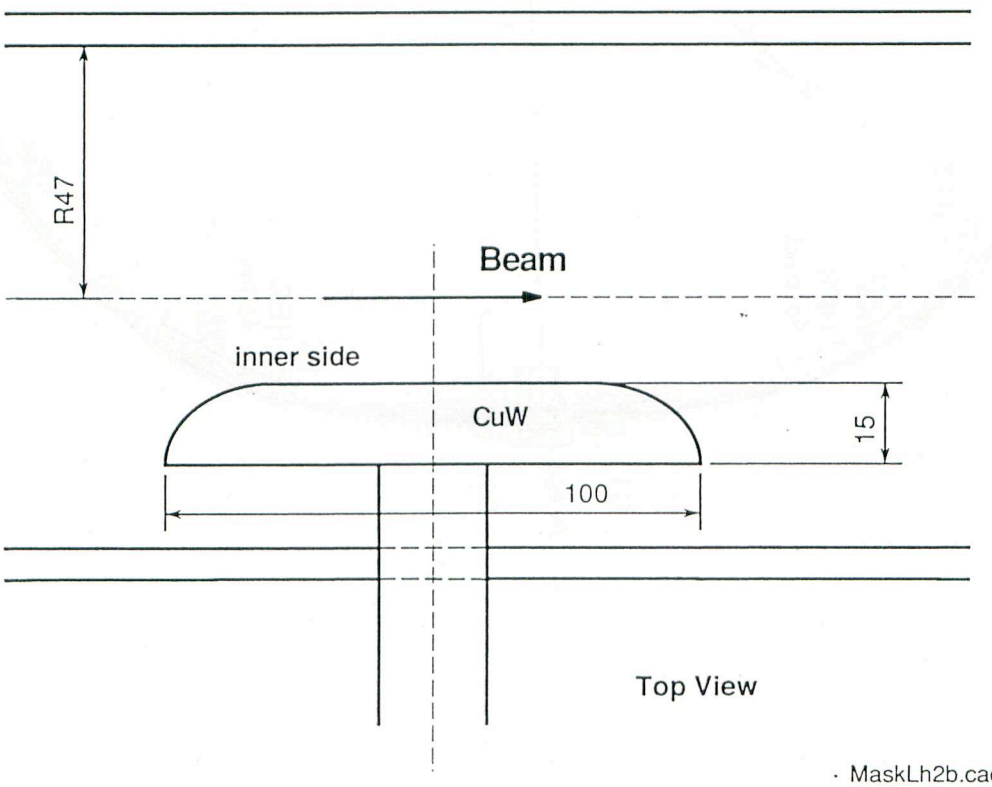

MaskLh2b.cad

LER Vertical Mask

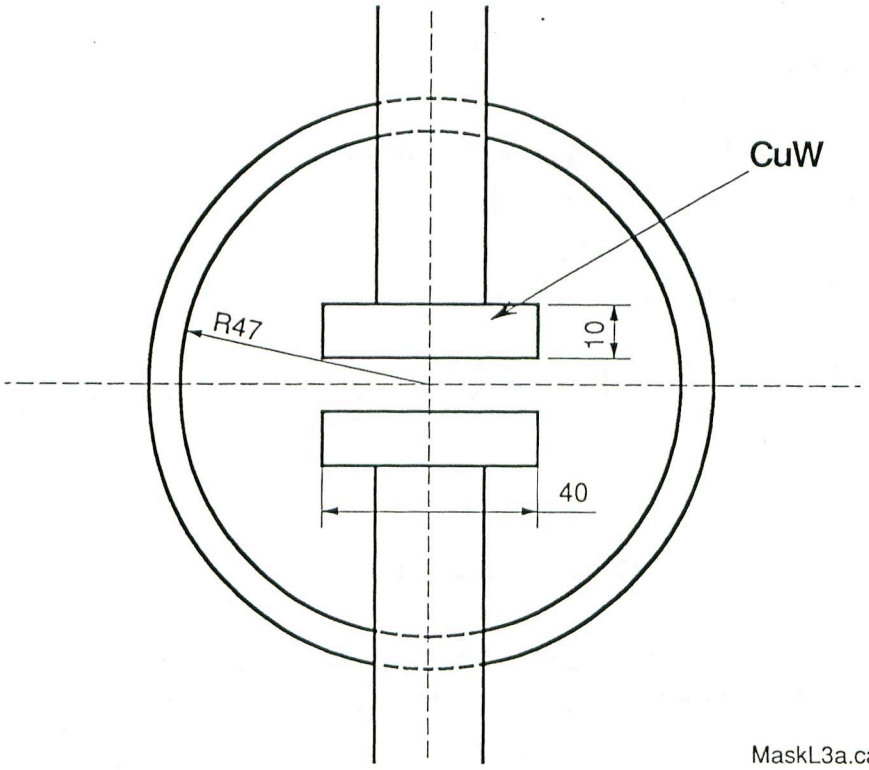

MaskL3a.cad

LER Vertical Mask

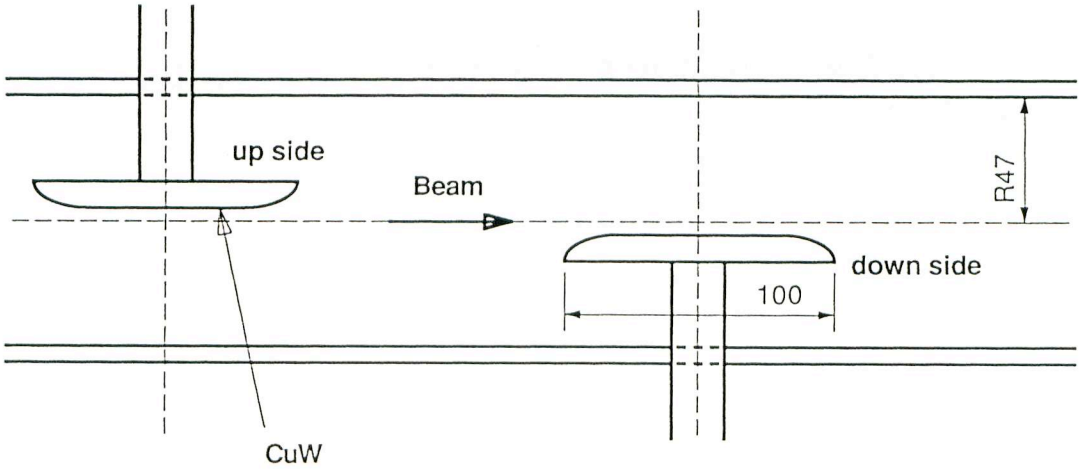

Side View

MaskL3b.cad

Beam dump

At each scheduled beam dump,
to minimize radiation,
beam must be kicked out
by kickers of an abort system.

Wasted beam must be dumped into a dump.

Beam is extracted horizontally.

The beam crosssection is so small
that the extraction window can not
tolerate the heat load.

How to protect the window.

During the extraction,
beam is also deflected gradually
in the vertical direction
to increase the effective crosssection.

The window chamber is made of heat
resistant Ti.

A set of kickers consists of
horizontal and vertical kickers,
and is powered by a power supply,
to guarantee the simultaneous kicks.

After passing through the window,
the beam is deflected vertically
by a Lambertson-type septum magnet,
and is shot into a dump.

The dump is surrounded with concrete
for neutron shielding.

Limitation of the abort system

Rise time of kickers is 1 μsec.

A series of empty buckets
of the same time period is needed.
(The maximum kicker voltage is 35kV.)

Allowable COD is +/- 5mm.

Beam is scattered before reaching
the dump, if COD > 5mm.

At urgent cases, COD could be larger.
Abort the beam before COD grows.

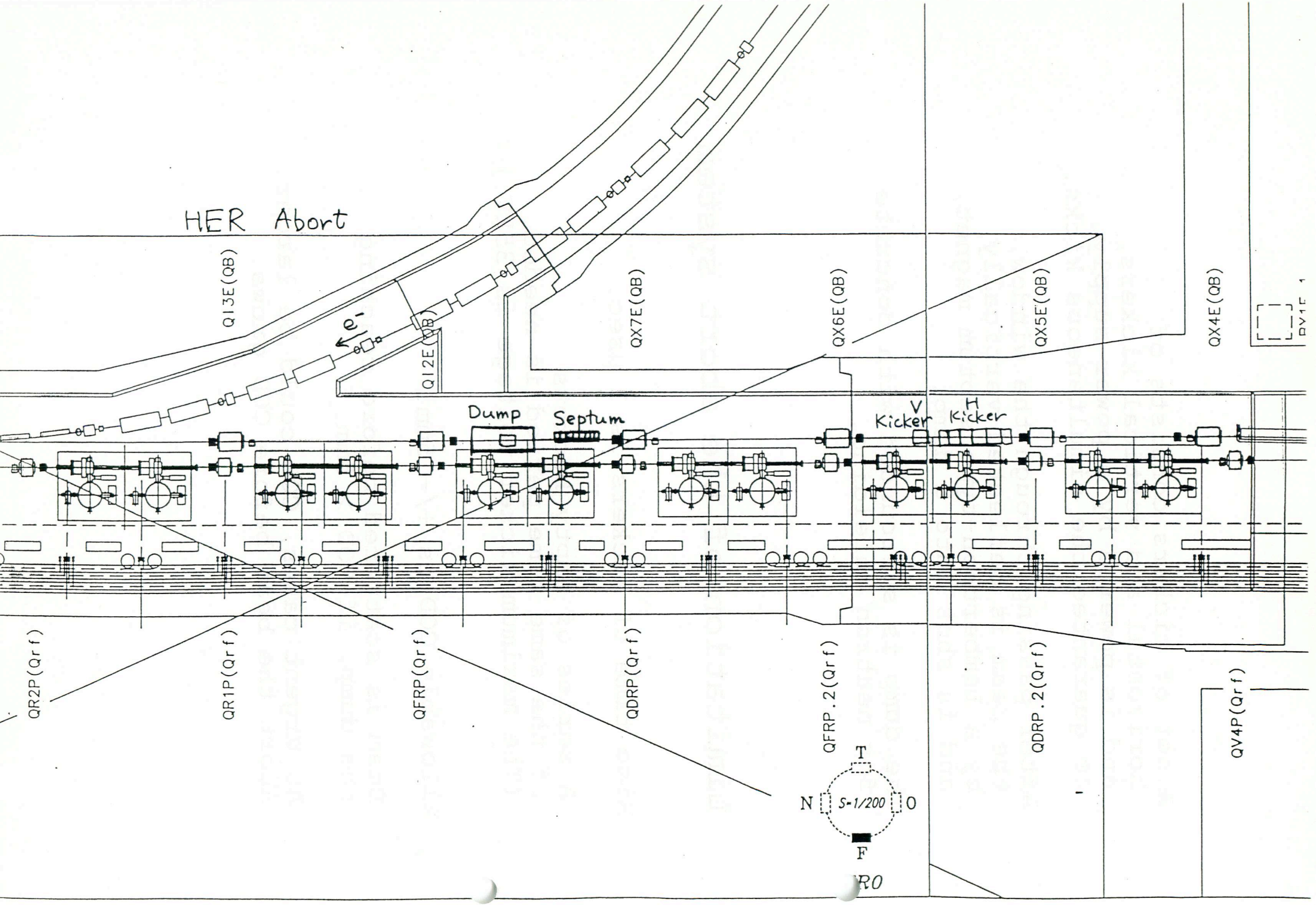
HER Abort
Q13E(QB)
Q12E(QB)
e-
QX7E(QB)
QX6E(QB)
QX5E(QB)
QX4E(QB)
Dump
Septum
V Kicker
H Kicker
QR2P(Qrf)
QR1P(Qrf)
QFRP(Qrf)
QDRP(Qrf)
QFRP.2(Qrf)
QDRP.2(Qrf)
QV4P(Qrf)
T
N
S-1/200
O
F

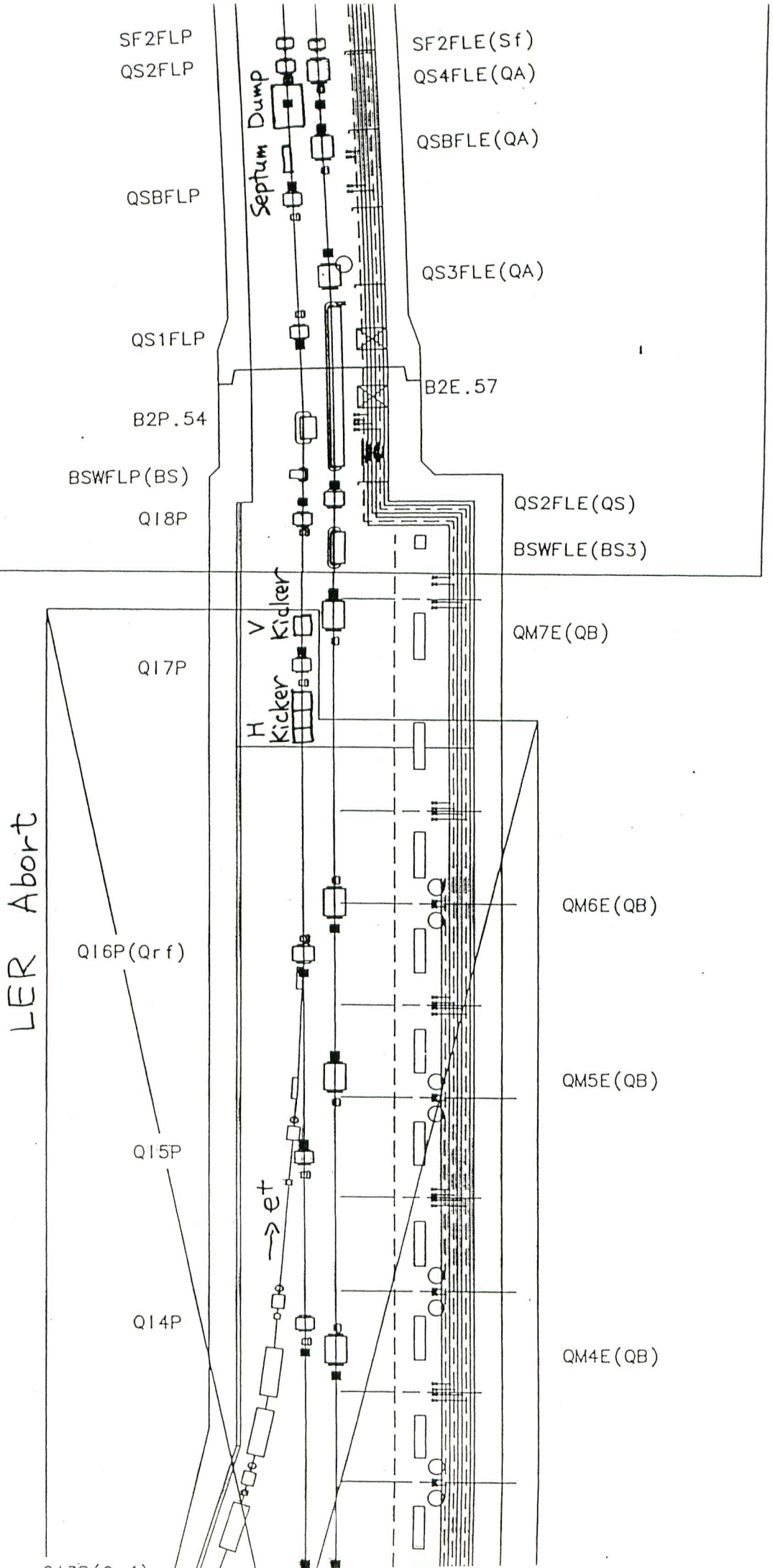
SF2FLP
QS2FLP
Septum Dump
QSBFLP
QS1FLP
B2P.54
BSWFLP(BS)
Q18P
V Kicker
H Kicker
Q17P
LER Abort
Q16P(Qrf)
Q15P
Q14P
→ e+
SF2FLE(Sf)
QS4FLE(QA)
QSBFLE(QA)
QS3FLE(QA)
B2E.57
QS2FLE(QS)
BSWFLE(BS3)
QM7E(QB)
QM6E(QB)
QM5E(QB)
QM4E(QB)

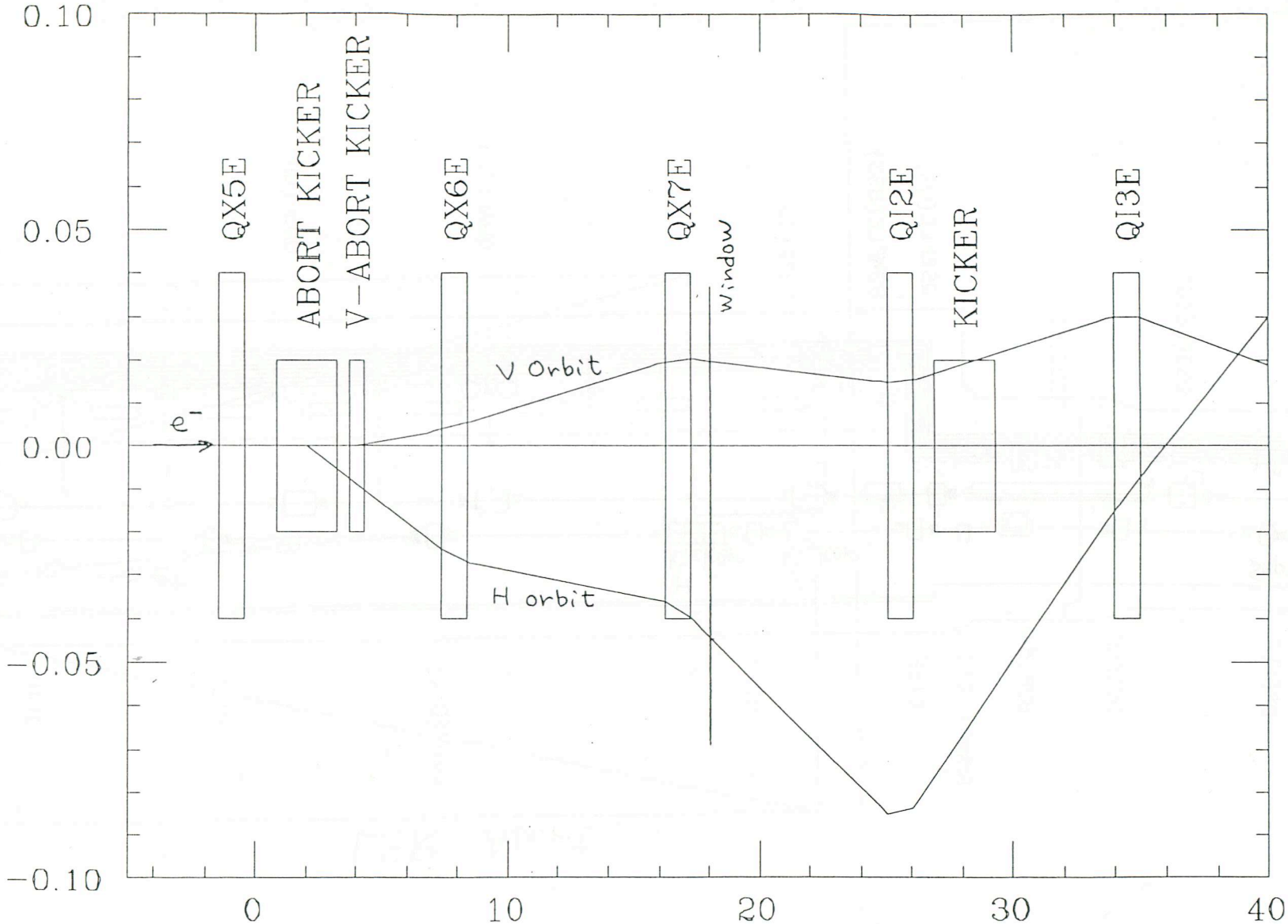

HER abort orbit, LXWE.3 +2.0m, kick angle −4.5mrad

HER v−abort orbit, LXWE.3 +4.0m, kick angle 1.2mrad

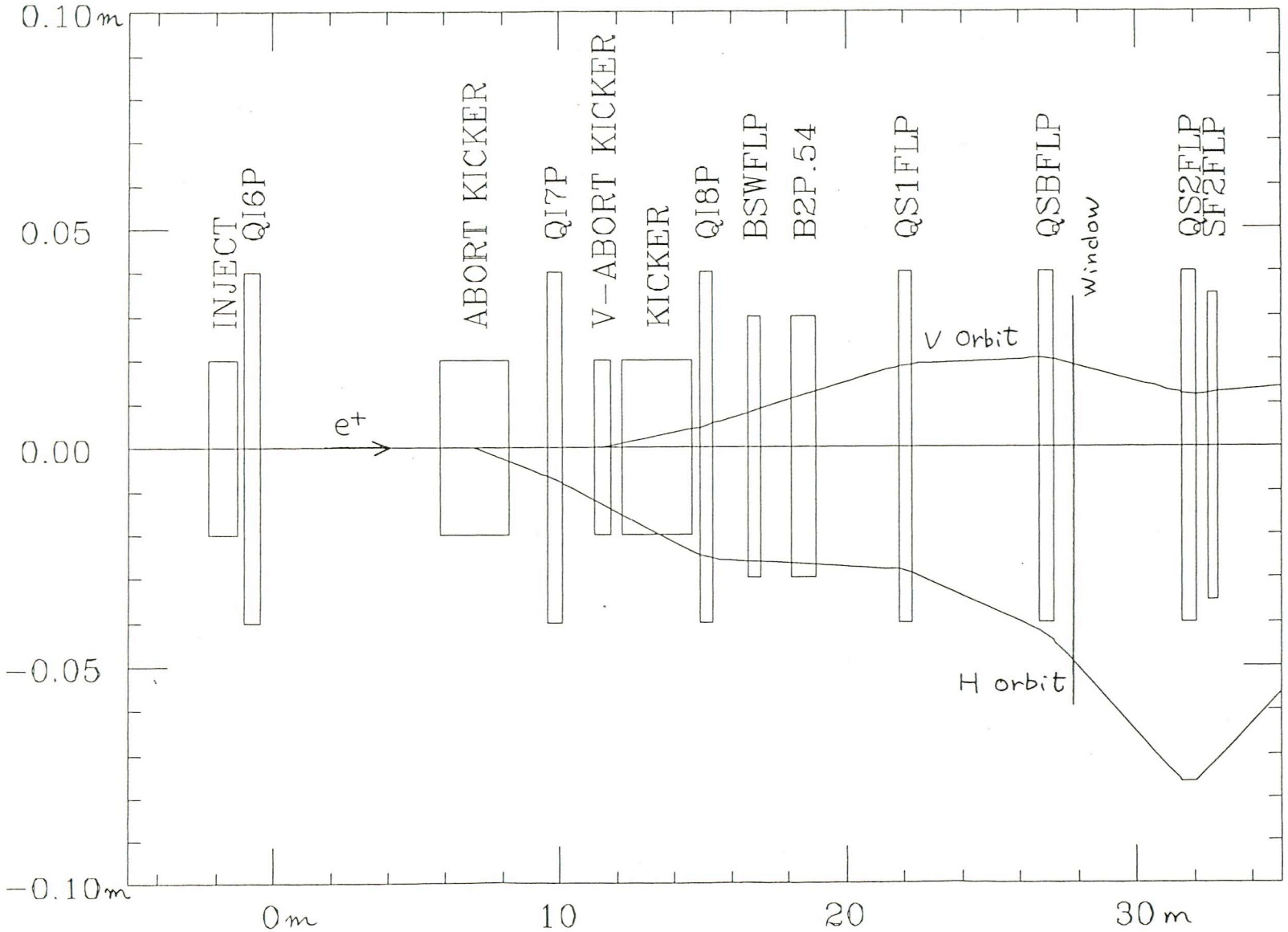

LER abort orbit, LM6FLP +7.0m, kick angle −2.5mrad

LER v−abort orbit, LM7FLP +1.0m, kick angle 1.4mrad

Simulation of H&V Kickers

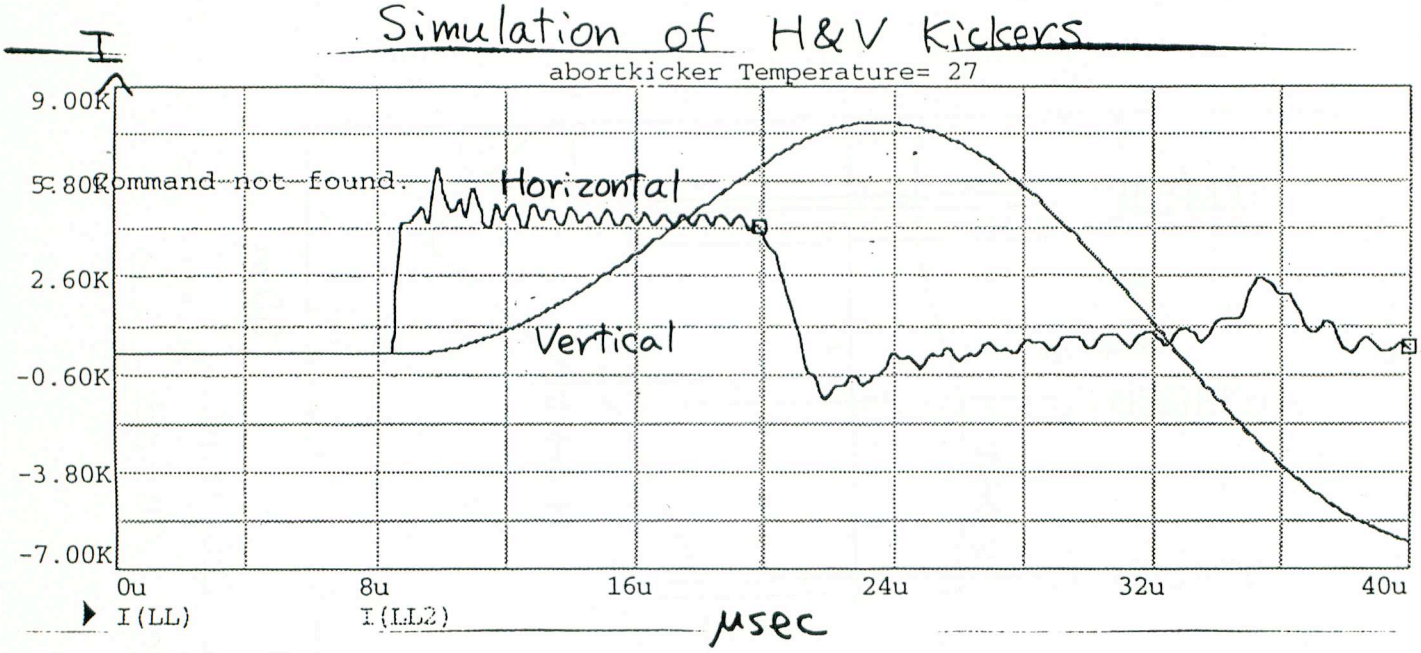

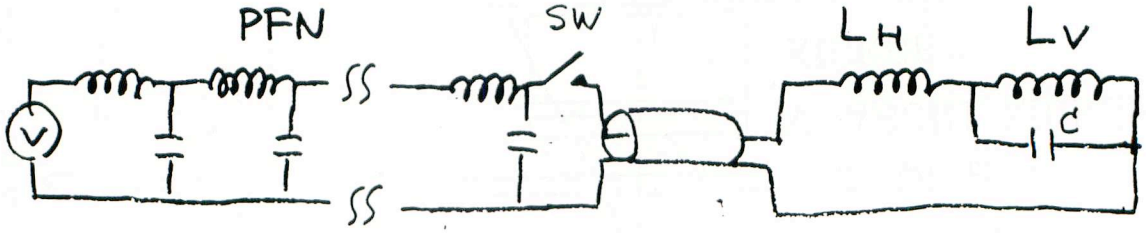

LER Abort Extraction

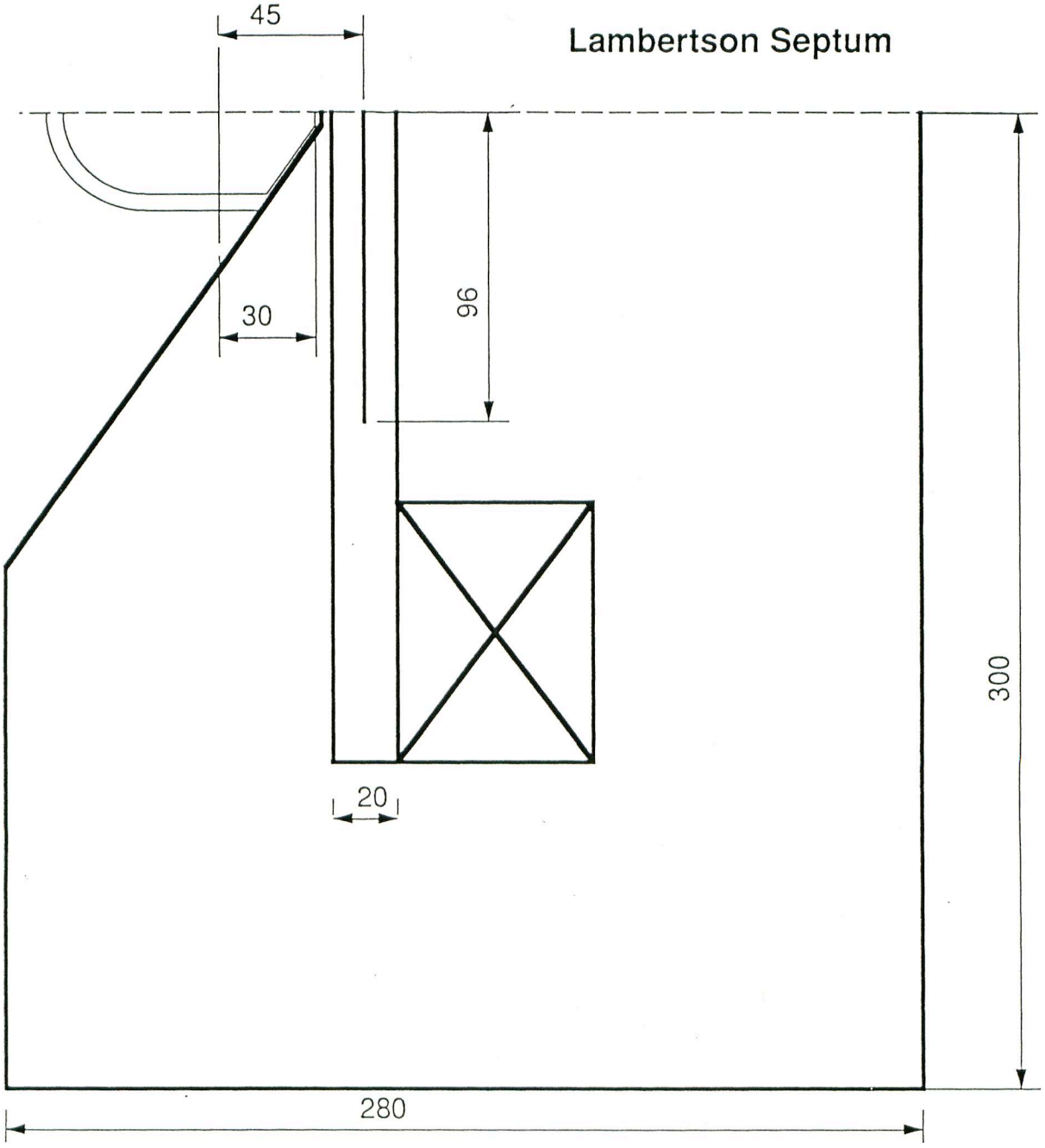

AbortLa02Dec97.cad

LER Abort Extraction (Top View)

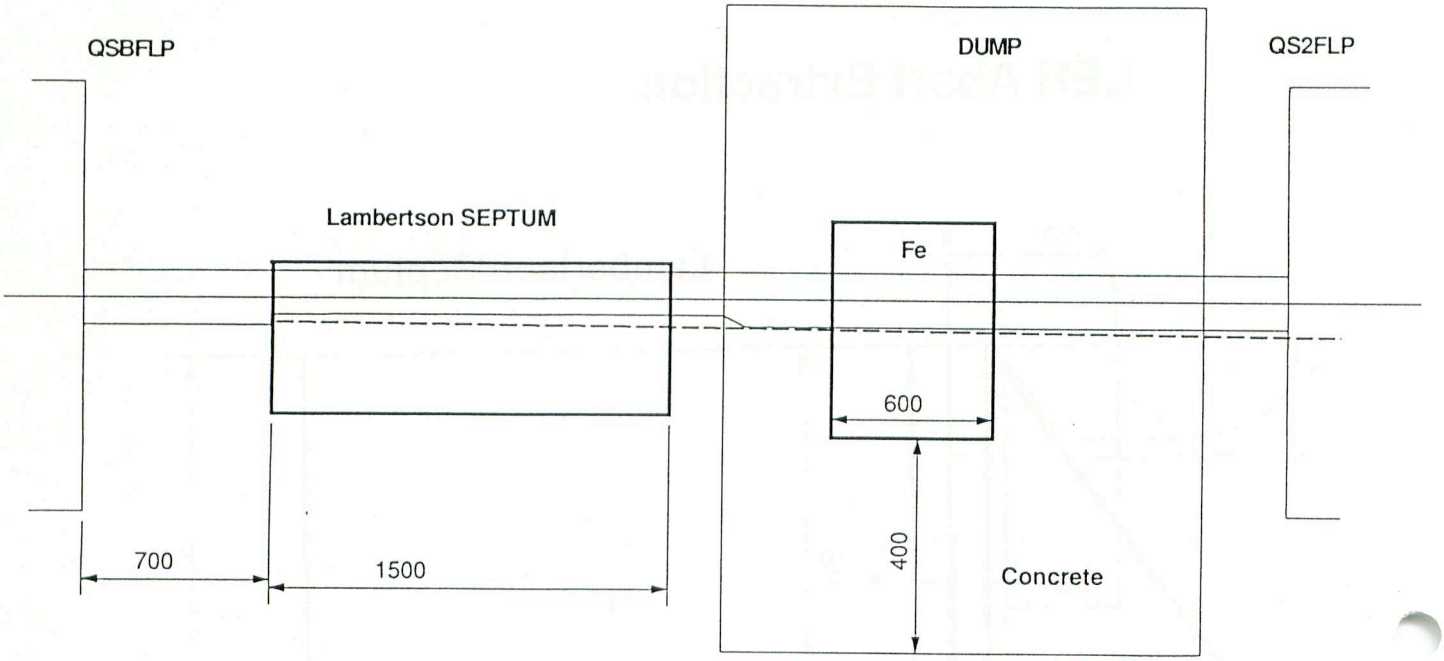

AbortLc02Dec97.cad

LER Abort Extraction (Side View)

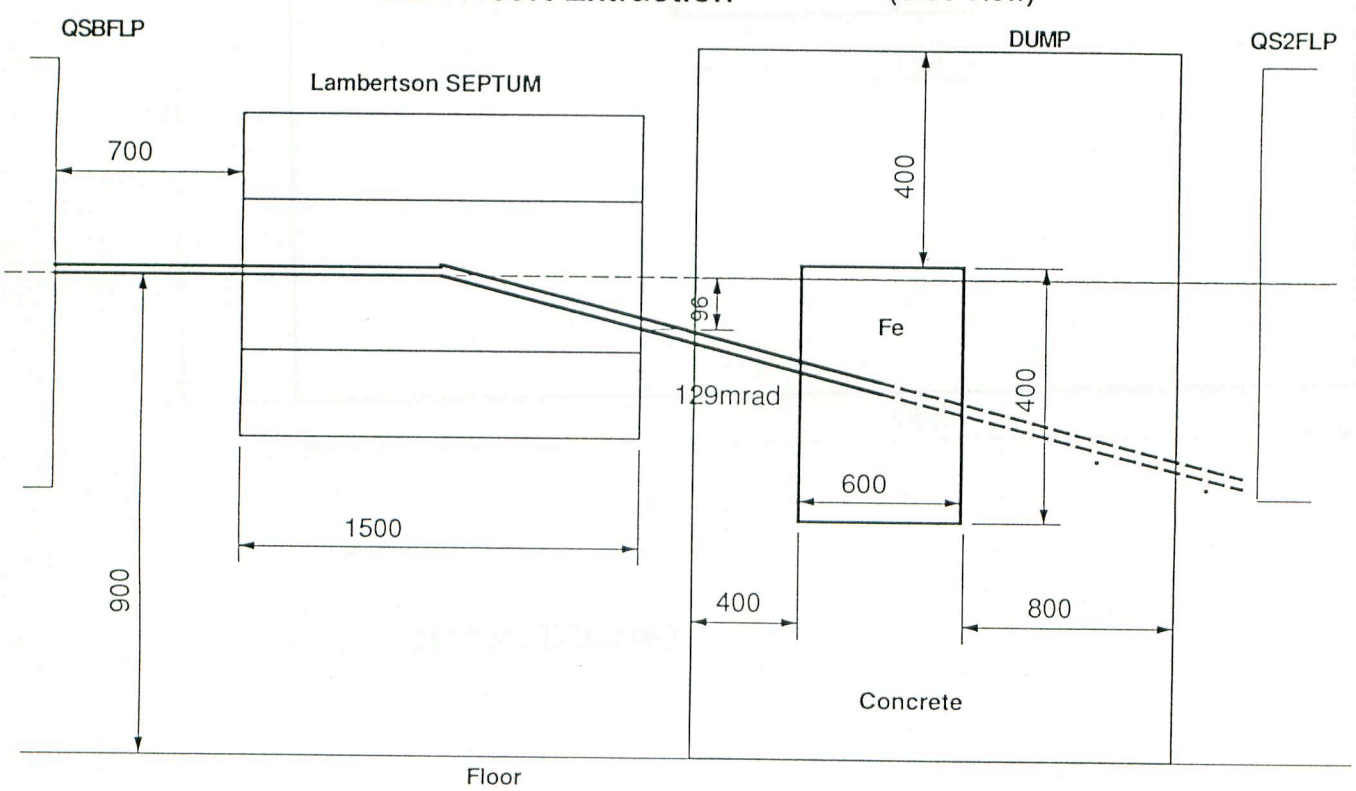

AbortLb25Feb98.cad