KEKB Magnet Power Supply System

KEKB Magnet Group

Masato Yoshida and Tadashi Kubo

KEKB Accelerator Review

March 5, 1998

Contents

1. Introduction

1) Type and The Number of Power Supplies
2) Specifications (Ripple and Stability)

2. System Overview

1) ARCNET Interface, GPIB Current Monitor and Interlock System
2) Pictures of Switched Mode (St & Q) Power Supplies

3. Performance of Power Supplies

1) Ripple, Stability and Setting Error
2) EMC (Electromagnetic Compatibility) (EMI (Interference) & EMS (Susceptibility))
3) Lifetime and Maintenance

4. Schedule

Manufacture, Installation and Adjustment

5. Conclusion

Magnet Power Supplies for KEKB

Type	Mode	Voltage (V)	Current (A)	Number	Maker
TRISTAN Recycle for B, Wiggler *1	SCR	550-740	840-1250	8	Hitachi
Large Power for Q	SCR + Dropper *2	60-930	500-3500	20	IDX
Middle Power for B, Q	PWM *3 20kHz *4	20-130	200-1250	360	Nichicon
Small Power for St	PWM *3 100kHz *4	50-100	5-10	1841	IDX

*1: Except for QCS power supplies.

*2: Transistor dropper.

*3: Pulse Width Modulation (= Switched mode). *4: Switching frequency.

Specifications for Magnet Power Supply

Magnet Type	Field Ripple (p-p) *1	Stability (p-p) / year
Bending Quadrupole QCS Wiggler	1×10^{-5} (10 ppm.)	1×10^{-4} (100 ppm.)
Sextupole	1×10^{-4} (100 ppm.)	5×10^{-4} (500 ppm.)
Steering	5×10^{-5} (50 ppm.)	5×10^{-4} (500 ppm.)

*1: Field ripple is suppressed by copper chamber.

Field ripple is about tenth of current ripple at 100Hz.

Control System

1. ARCNET (Attached Resource Computer NETwork) Interface Board
   (This will be explain in later Nakamura's session.)

   1) CPU on the Board for Current Setting
   2) High Throughput : 2.5 Mbps
   3) High Reliability: Talken-passing Protocol

2. GPIB Current Monitor System

   1) Measurement Time (Resolution 200ppm.)
      < 2 seconds /All Power Supplies

   2) High Resolution and High Accuracy
      · Maximum Resolution : 0.2 ppm.
      · Maximum Accuracy : 25 ppm. / 2 years
        (Including Temperature Drift)

3. Interlock System with PLC (Programmable Logic Controller)

   1) High Reliability
      · Self-healing Network (Ring Network)
      · Double Power Supply for CPU

KEKB Magnet Power Supply Control System

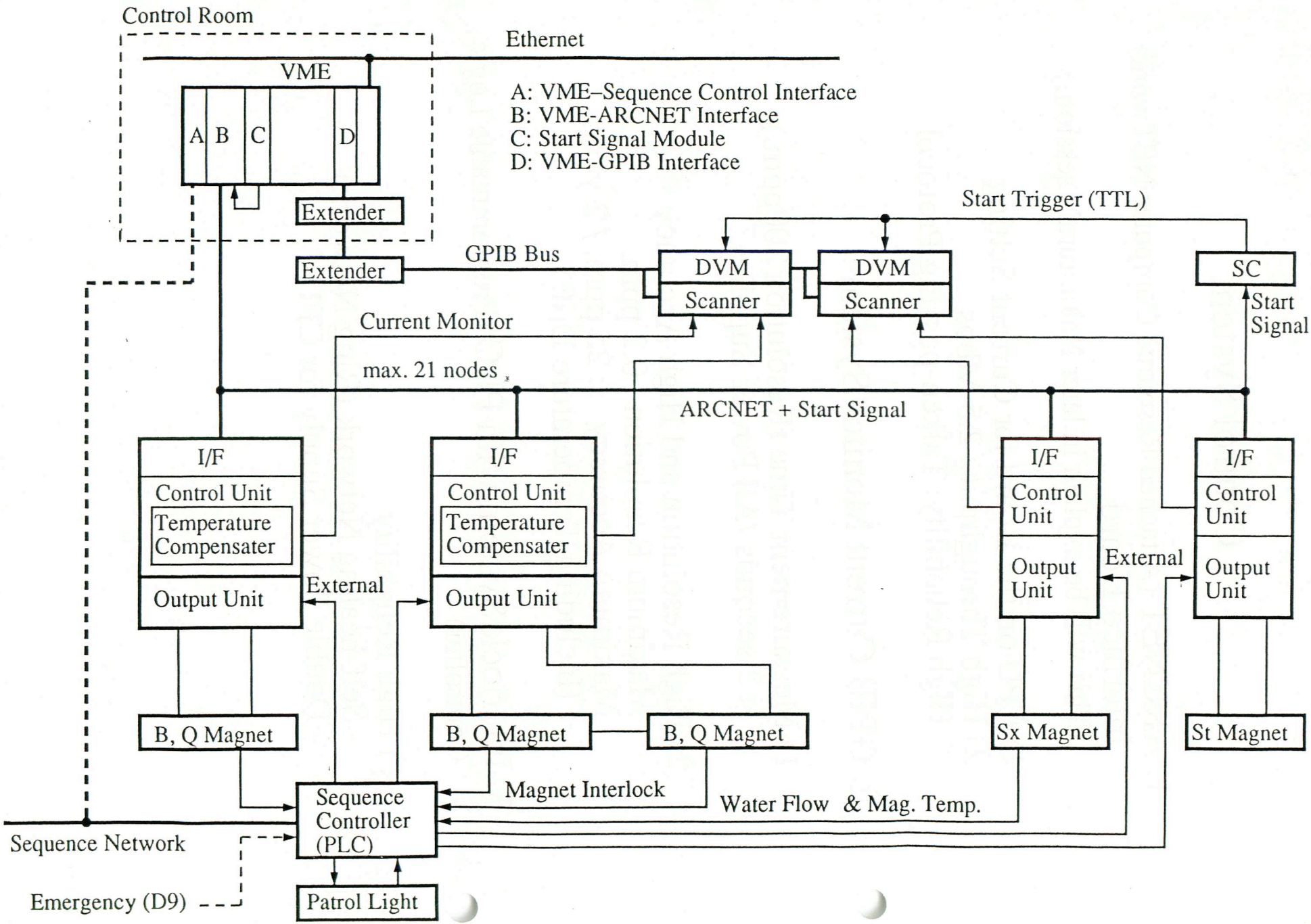

Block Diagram of Current Setting

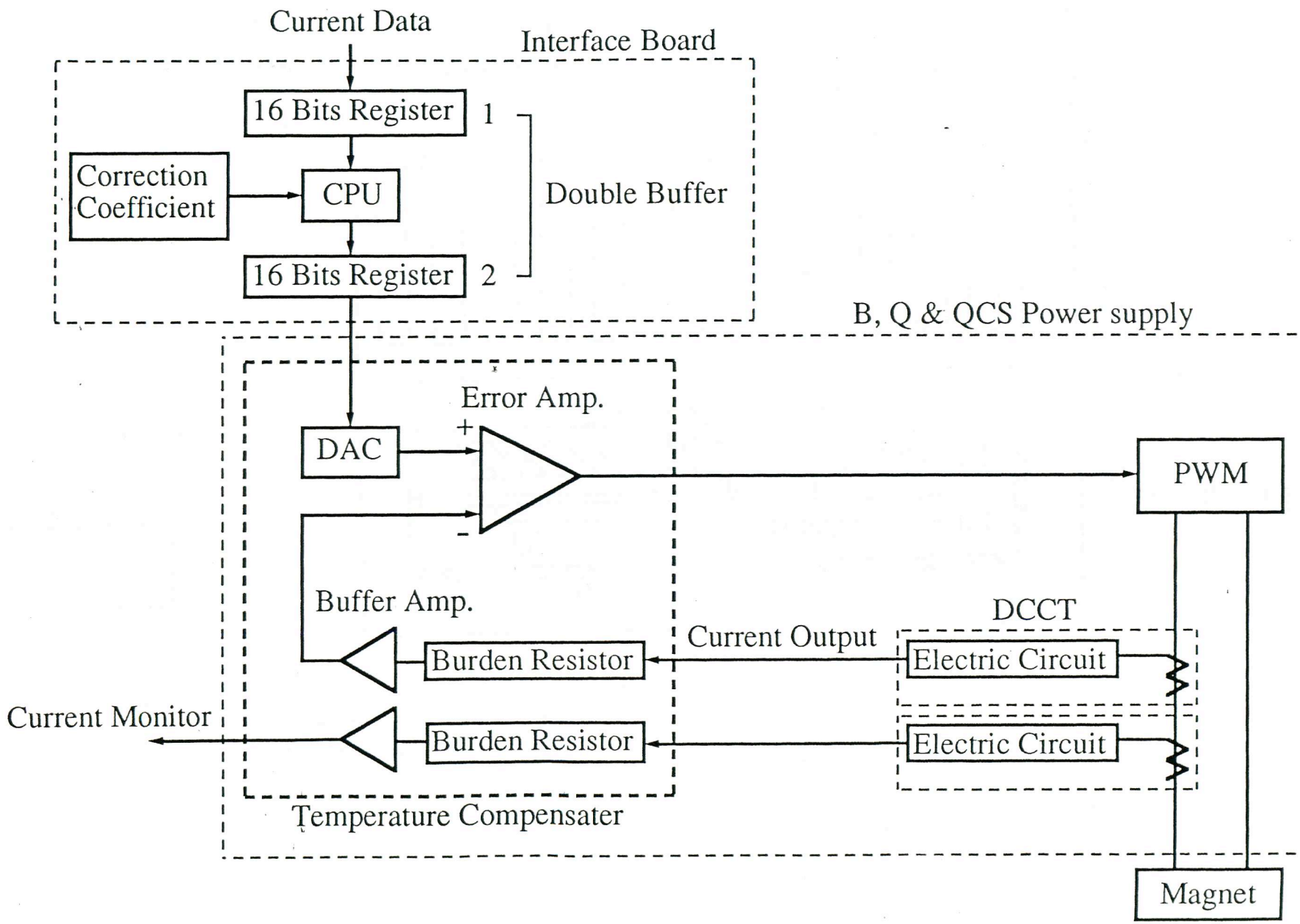

Temperature Compensater for B, Q Magnet Power Supply

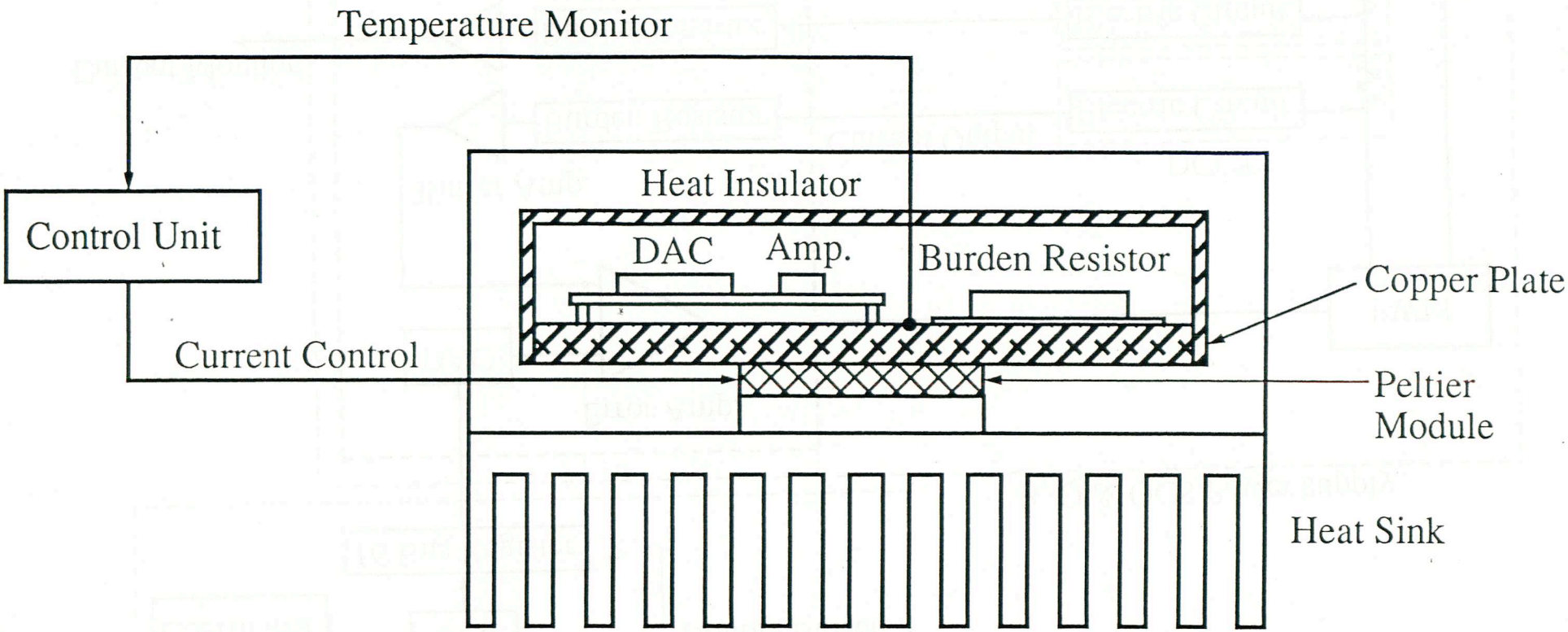

External Form Size : Max. 200(W) * 150(D) * 100(H) (mm)

Inside temperature of a compensater is controlled 25 ± 0.5 °C on condition outside temperature is from 10 to 50 °C.

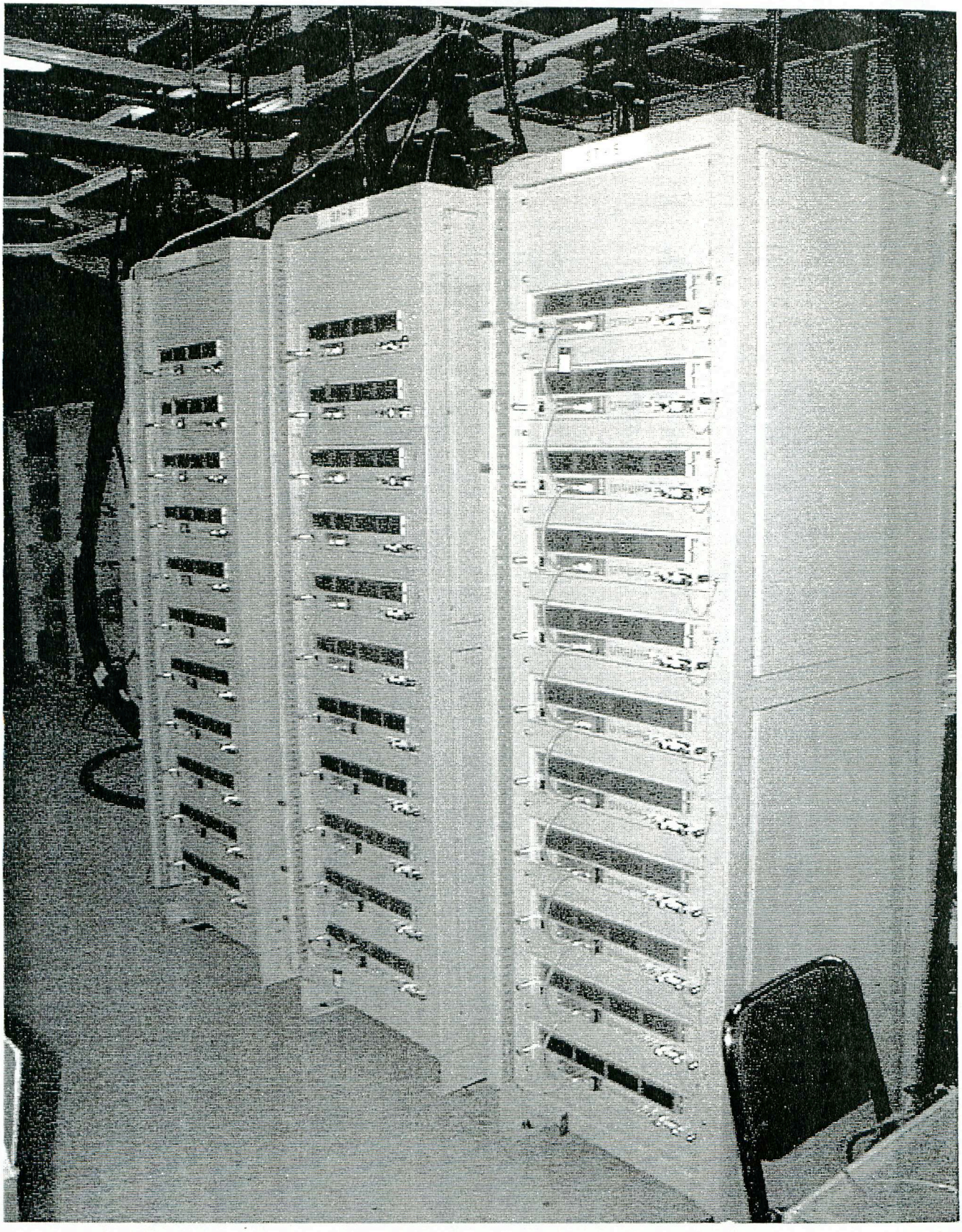

Steering power supplies for BT (the same for MR).

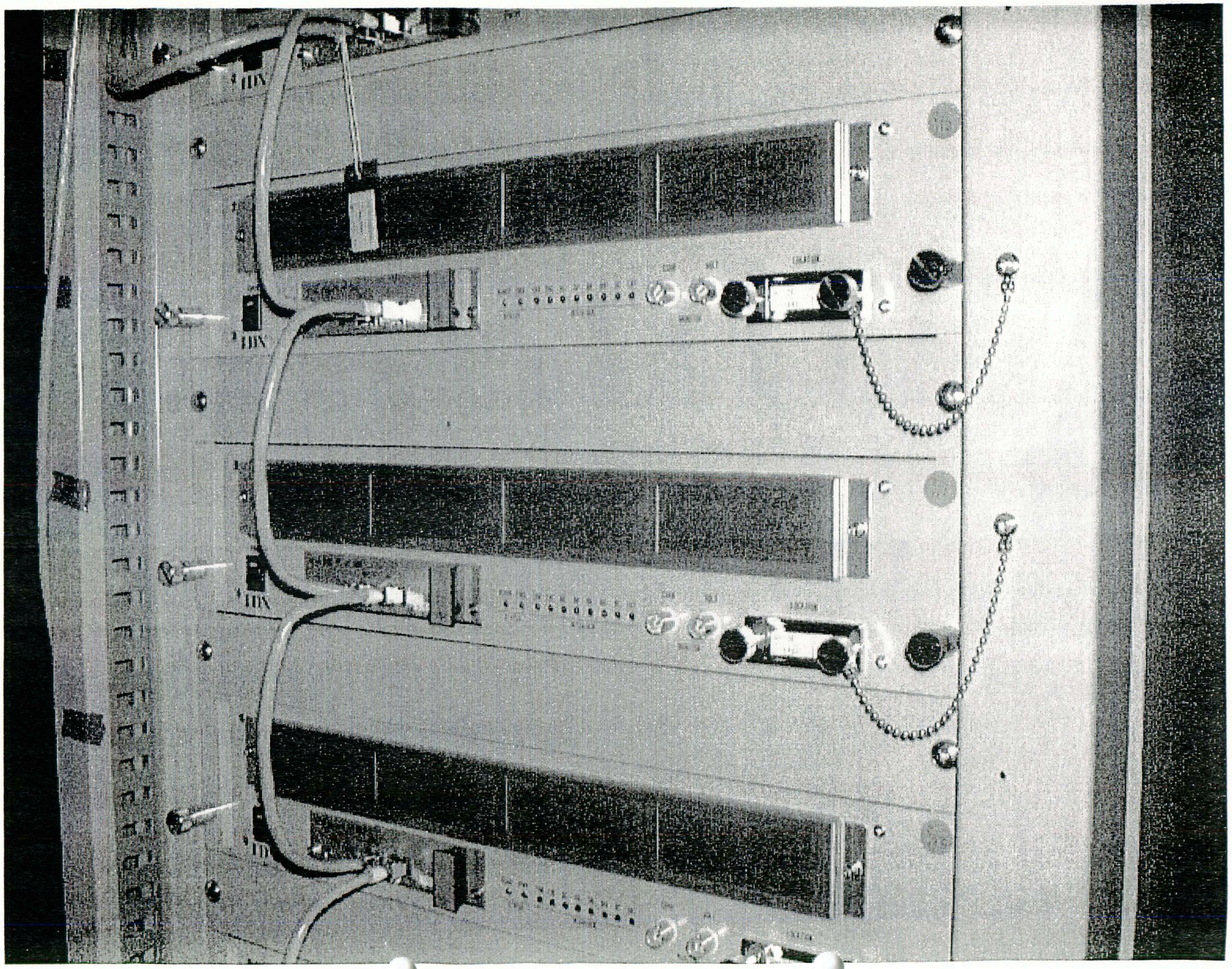

Steering power supply unit and ARCNET interface board.

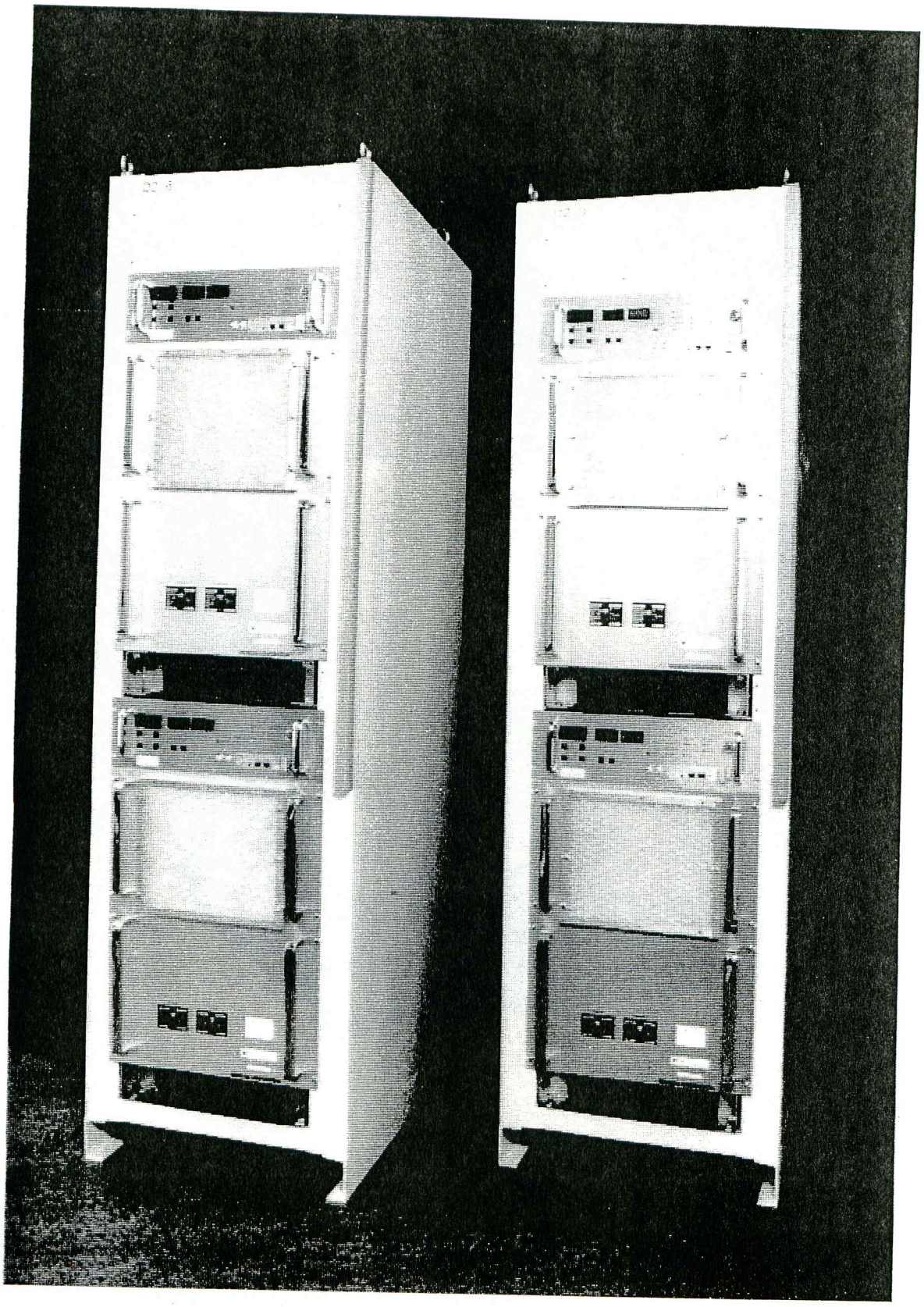

Power supplies of middle power type (25kw) in the racks.

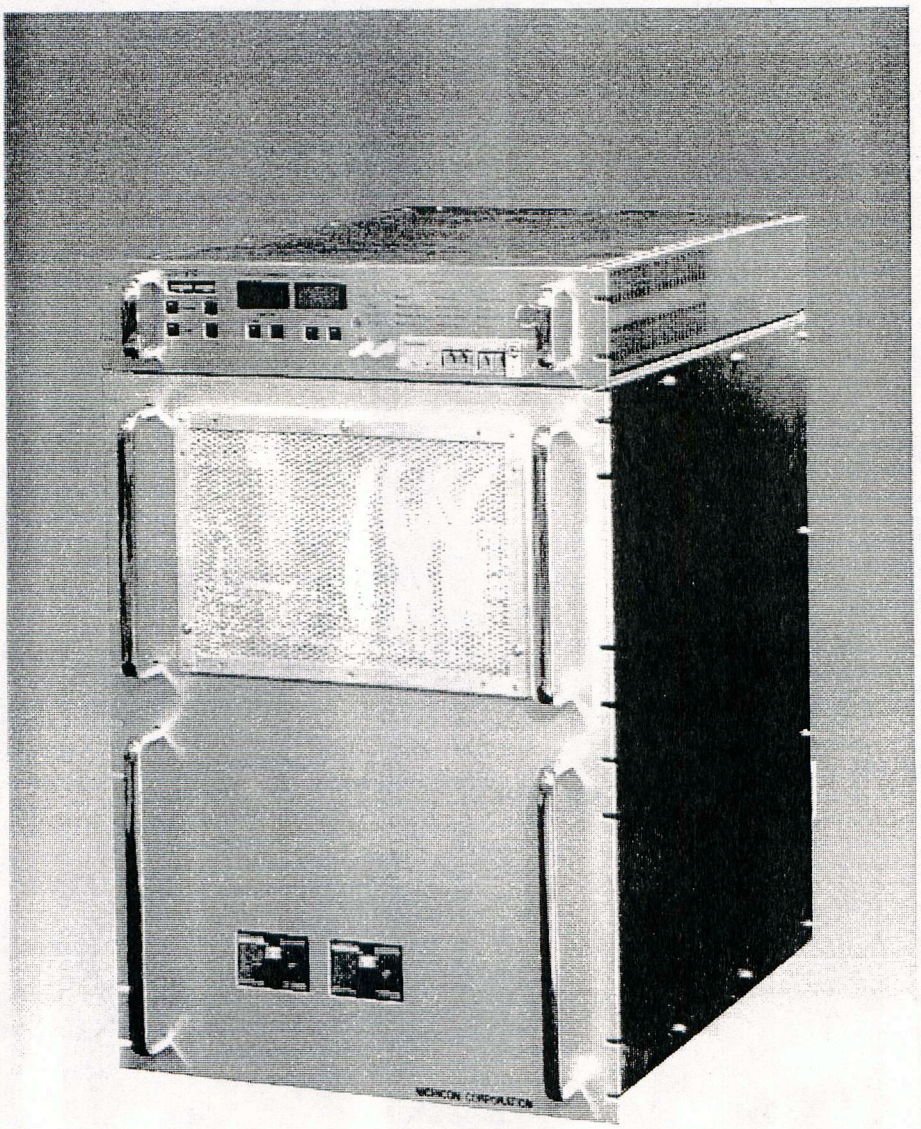

Power supply of middle power type (25kw).
Control unit and power uint.

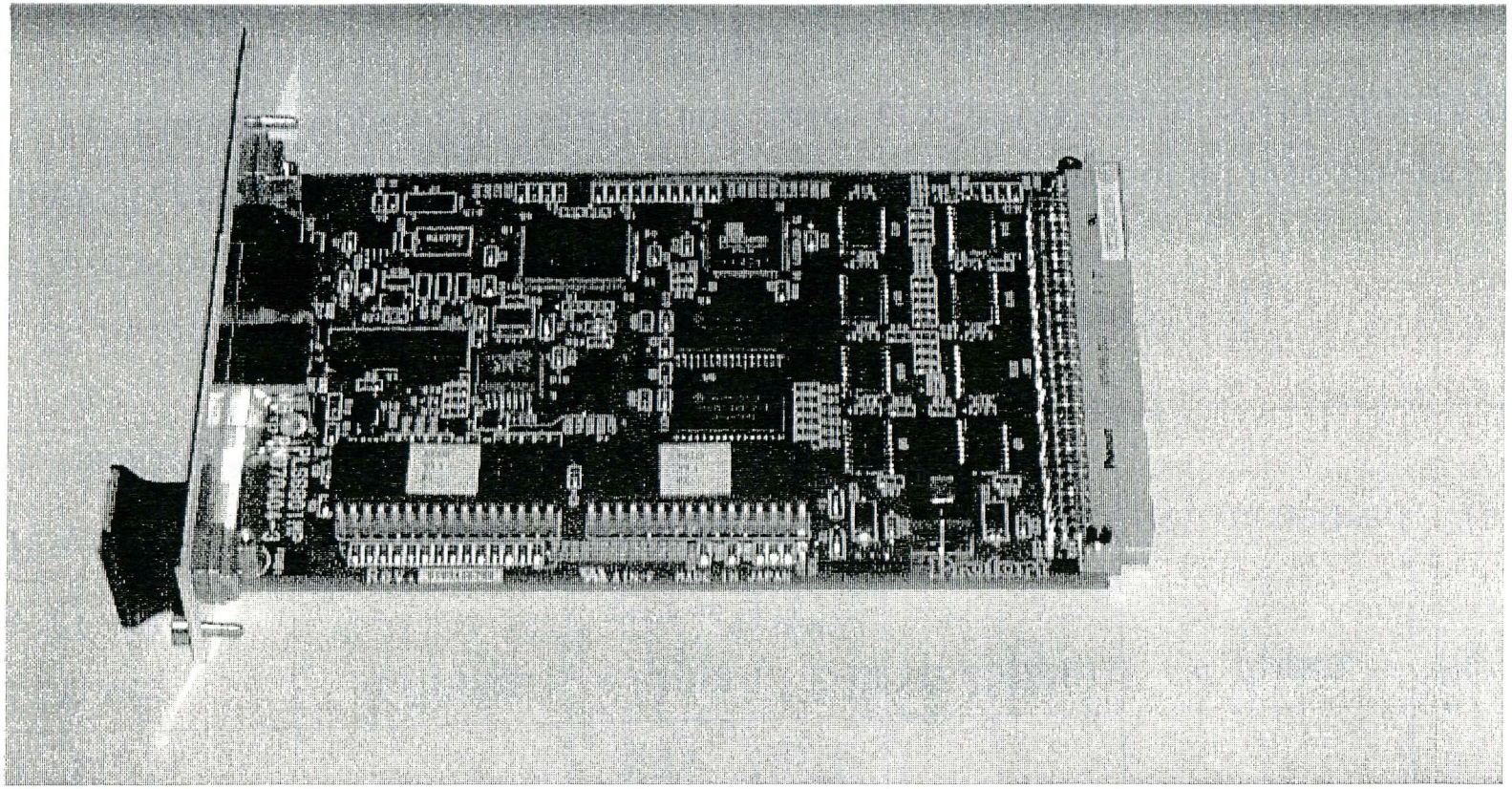

ARCNET interface board (VME half size).

Performance of Magnet Power Supply

Type	Current Ripple (p-p)	Current Stability (p-p)	Setting Error	Monitor Error	Efficiency
Large Power for Q *1	< 1ppm.	<15ppm./ 8h ΔT= 2 0 ℃	< 30ppm.	not measured	94 - 97%
Middle Power for B, Q *2	< 5ppm.	<15ppm./ 24h ΔT= 4 ℃	< 25ppm.	< 5ppm.	90 - 92%
Small Power for St, backleg *3	< 50ppm.	<50ppm./ 24h ΔT= 4 ℃	< 50ppm.	not measured	70 - 75%

*1, *2: Several power supplies have been measured in the factory.

*3: Dozens of power supply have been measured in the factory.

Remark: Temperature coefficient of the current feedback circuit of all type power supplies is about 10ppm. / ℃. Middle and Large power type compress the difference of temperature of the air by the temperature compensater.

EMC of Switched Mode Power Supply

Type	EMI (VCCI, Class A*1)	Electric Noise Test *2 (EMS)				
		Electrostatic Discharge Test				AC line Input Test
		2k	4k	10k	20k	2kV (200ns, 1μs)
Middle Power (25kw)	cleared *3	all cleared *4				cleared
Small Power (300W)	cleared *3	cleared *4 /		not measured		

*1: Voluntary Control Council for Interference by information technology equipment.
Class A is for industry.
· Radiated Emission level: 30M - 1GHz (60 - 79dBμV)
· Conductive Emission level: 150k - 30MHz (50 - 57dBμV / m)
*2: The standard for industry device (IEC 1000). Capacitor of Electrostatic Discharge: 200pF
*3: Not including interface board. (ARCNET interface board is not cleared VCCI .)
*4: Including interface board.
Remark: Power supplies that cleared VCCI are not affected by outside electromagnetic noise, because they have shield against their own switching noise.

Lifetime and Maintenance

1. Long Life Design

The lifetime of power supplies is designed over 10 years except for the follow part.

· Peltier module of the temperature control unit (large and middle power type used)

The Lifetime: over 5 years.

2. Easy Maintenance

1) Small Power Type (PWM)
   · Replacement is very easy because power supply is made as
     (1) unit structure and
     (2) all connector connection.
   · Air cooling fan can be exchanged easily within 20 seconds.

2) Middle Power Type (PWM)
   · Unit Structure to replace (Two units in a rack)
   · Air cooling fan can be exchanged easily within 60 seconds.

3) Large Power Type (SCR + Transistor Dropper)
   Enough space to maintain inside power supply.

Schedule of Magnet Power Supply System

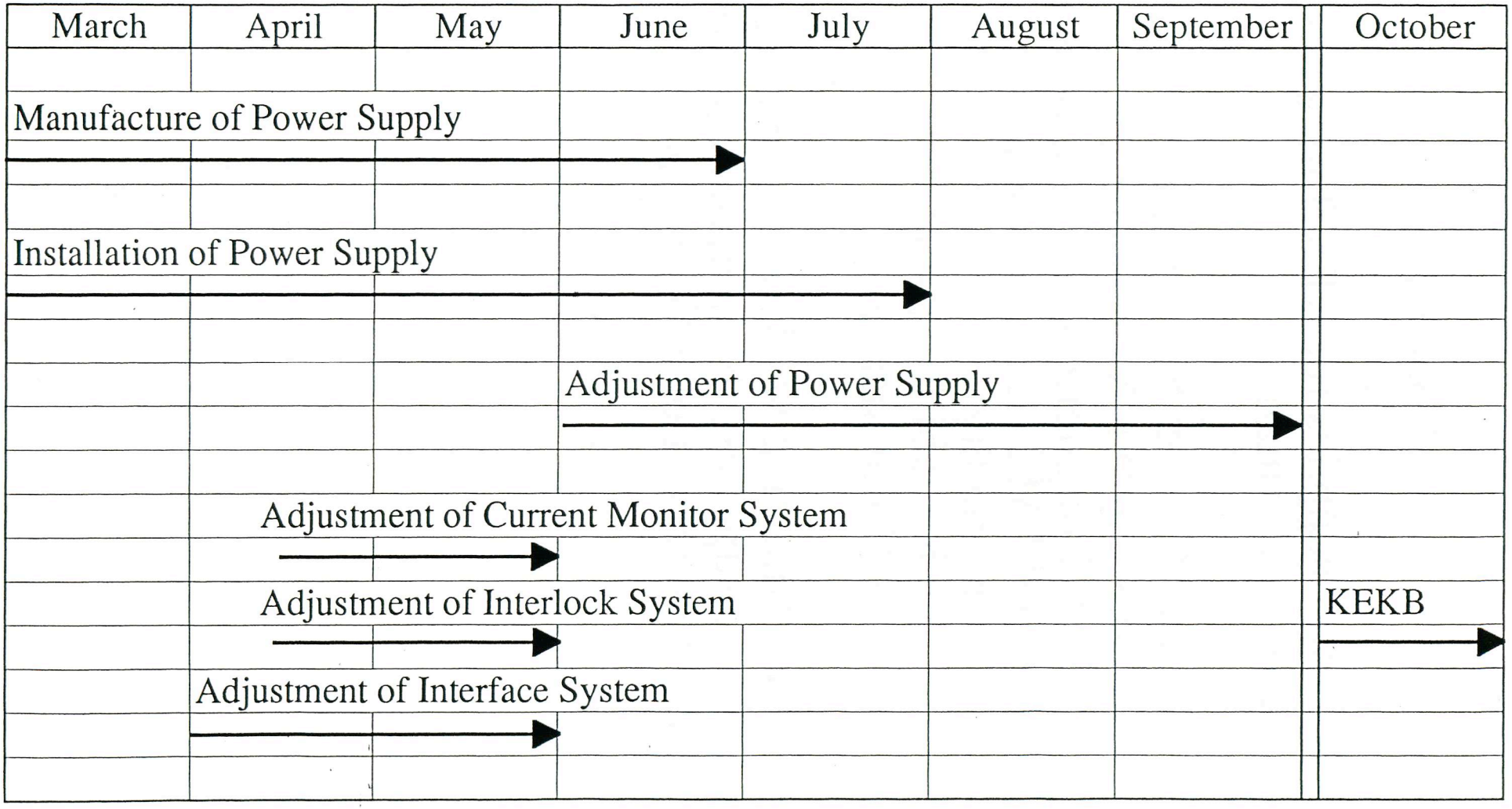

Conclusion

1. Power supplies for KEKB magnets have good performance.

   1) Less Current Setting Error
   2) Less Current Monitor Error
   3) Less Long-term Drift (Design Value)
   4) Good EMC (Electromagnetic Compatibility)
   5) High Reliability (Design)
   6) Easy Maintenance

2. The remaining works are manufacture of power supplies, the installation and the adjustment of all systems.