Bunch-by-bunch Feedback Systems

KEKB Accelerator Review 10/Feb/2000

M.Tobiyama, E.Kikutani, J.Flanagan and Y.Ohnishi

1. Outline of KEKB Bunch Feedback Systems.
2. Experience with the transverse feedback systems.
3. Transient-domain analysis of the instabilities.
4. Summary.

(Tune measurement system and bunch current monitor system will be shown in the beam instrumentation talk.)

1.Outline of KEKB Bunch Feedback Systems.

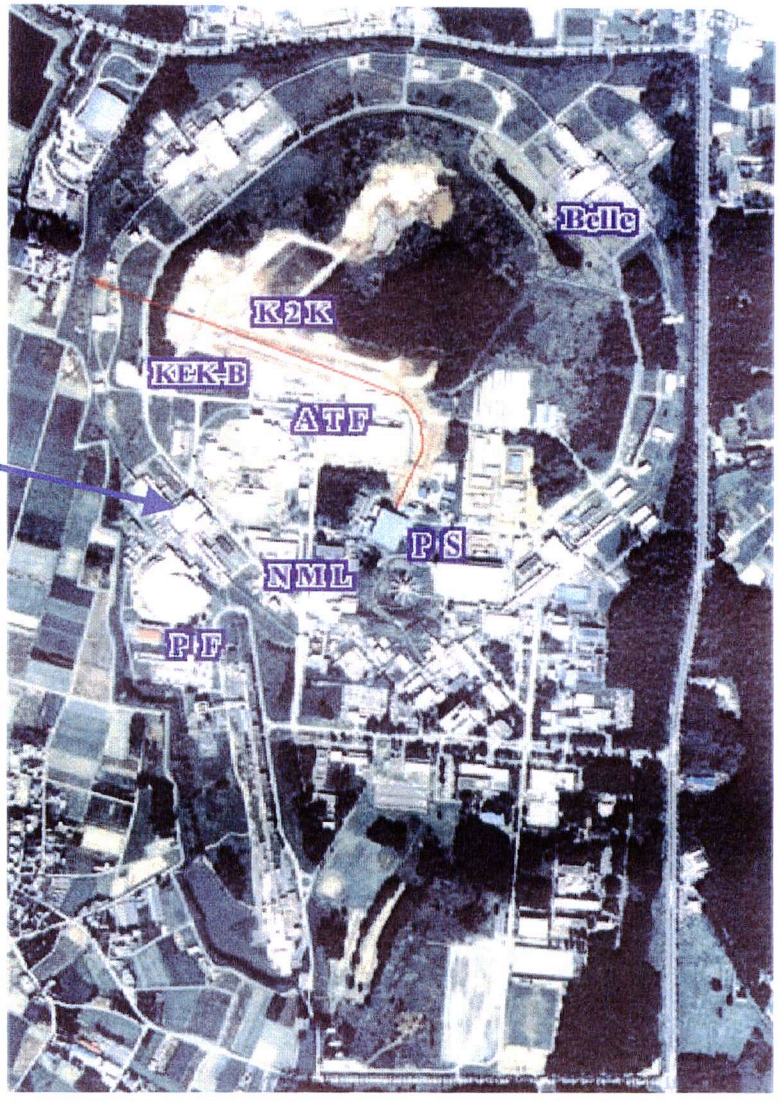

Fuji

☆All the feedback systems are installed around the Fuji area.

Fuji :

HER & LER : Injection point

LER : Cavity section

Feedback systems consist of:

1) Position detection systems compatible with the minimum bunch spacing of 2ns.
2) High-speed digital signal processing systems which work with the system clock of 509MHz.
3) Wide-band kickers fed by wide-band, high-power amplifiers.

Applications of digital signal processing systems.

A) Bunch current monitors.
B) Bunch oscillation recorder with 20MB of memory.

>> Transient-domain analysis

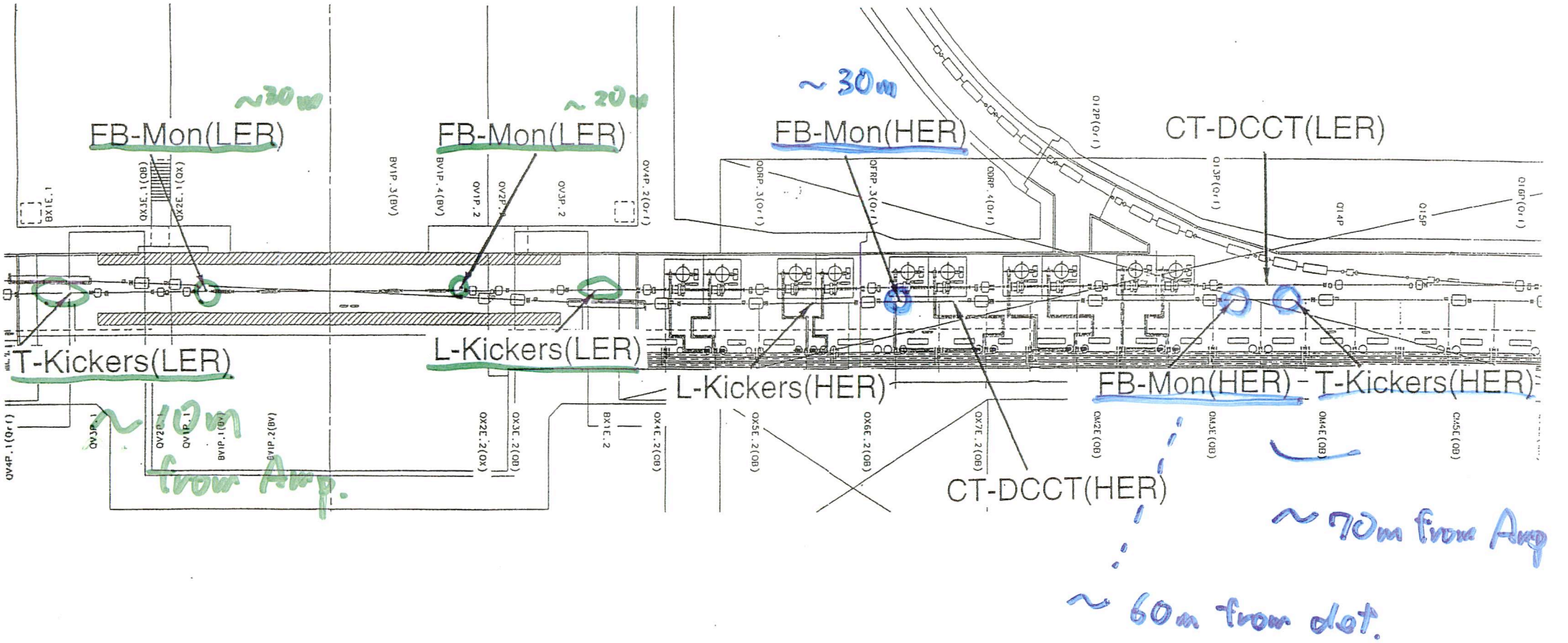
~30m
FB-Mon(LER)
~20m
FB-Mon(LER)
~30m
FB-Mon(HER)
CT-DCCT(LER)
T-Kickers(LER)
L-Kickers(LER)
L-Kickers(HER)
FB-Mon(HER)
T-Kickers(HER)
CT-DCCT(HER)
~10m from Amp.
~70m from Amp
~60m from det.

	HER	LER
Detectors		
Number of monitors	2	2
Number of electrodes	20x2	20x2
Power amplifiers		
Transverse low freq.(5kHz～1MHz)		
Number of amplifiers	4	4
Max. power	300W/amp.	300W/amp
Transverse wideband (10kHz～255MHz)		
Number of amplifiers	4	4
Max. power	250W/amp	250W/amp
Longitudinal amplifiers(1150MHz±250MHz)		
Number of amplifiers	-	8
Max. power	-	140W/amp
Kickers		
Transverse low freq.(1.2m)		
Number of kickers	1	1
Shunt impedance	120kΩ	120kΩ
Transverse wideband(40cm)		
Number of kickers	1	1
Shunt impedance	8kΩ	8kΩ
Longitudinal kickers		
Number of kickers	0	2
Shunt impedance		750Ω/kicker
Quality factor		～5

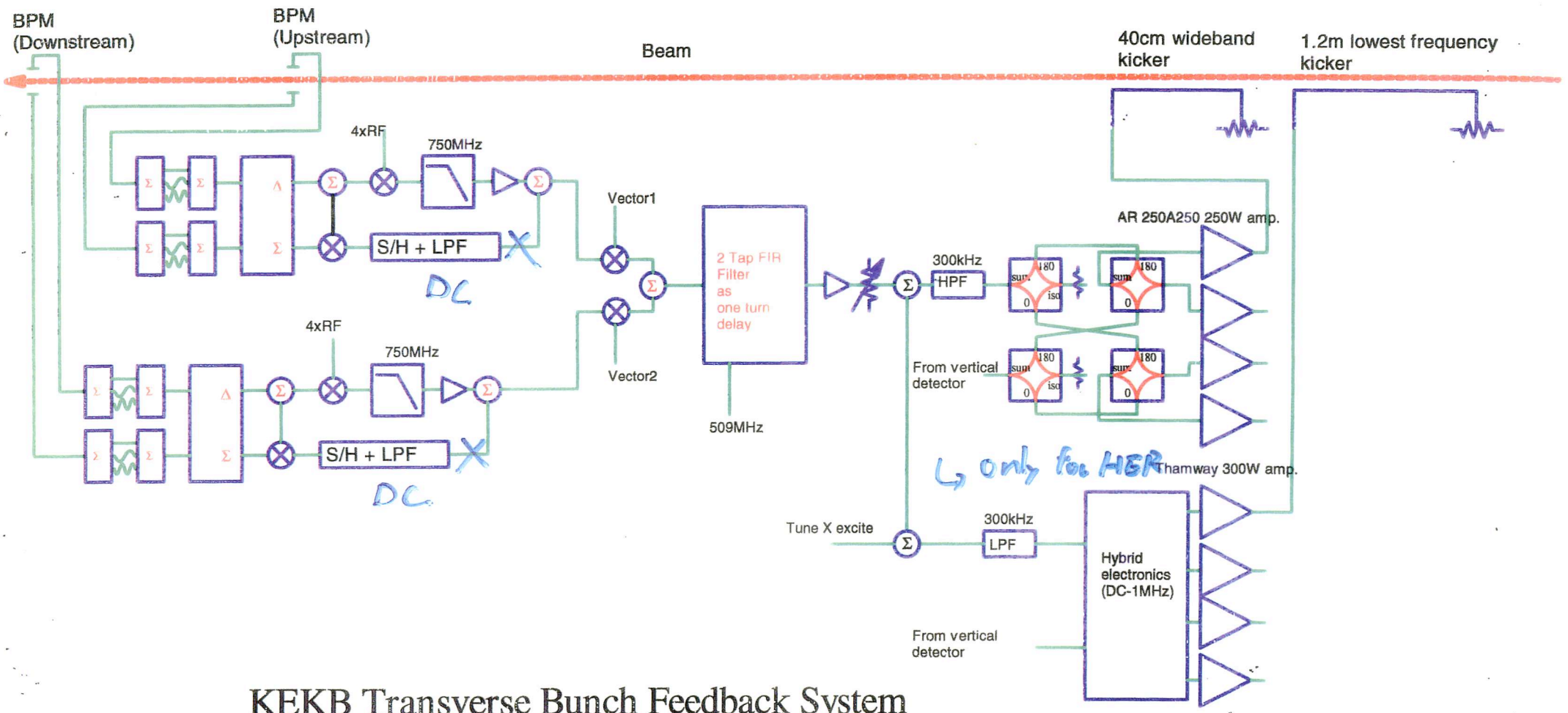

KEKB Transverse Bunch Feedback System

Transverse Feedback Systems

BPM

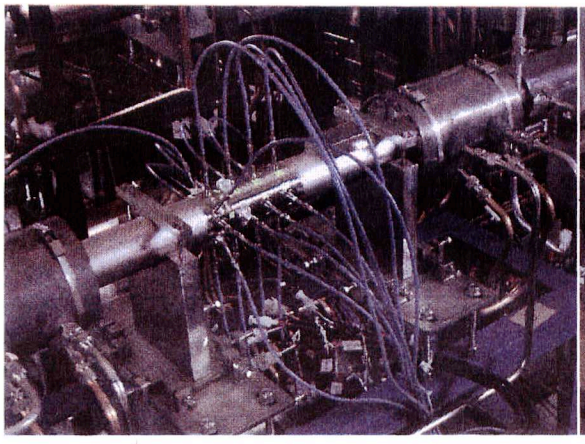

Detector

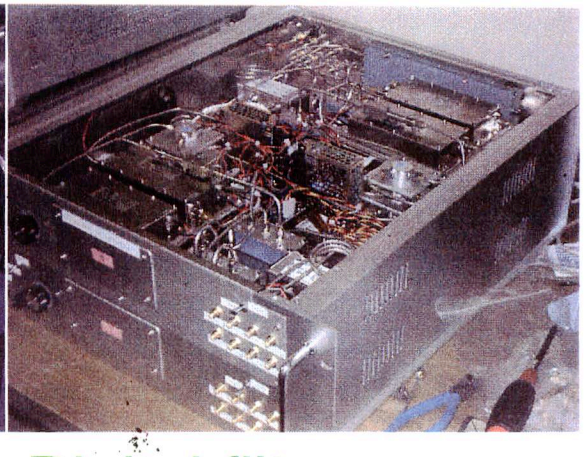

Front-end system

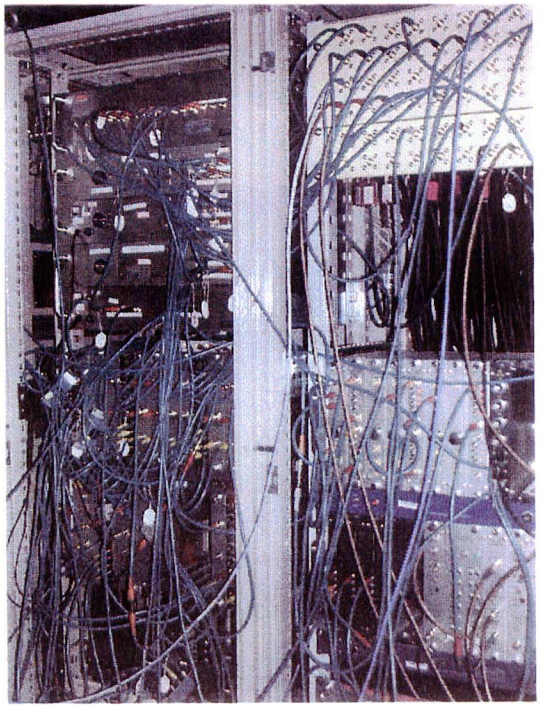

Digital filters

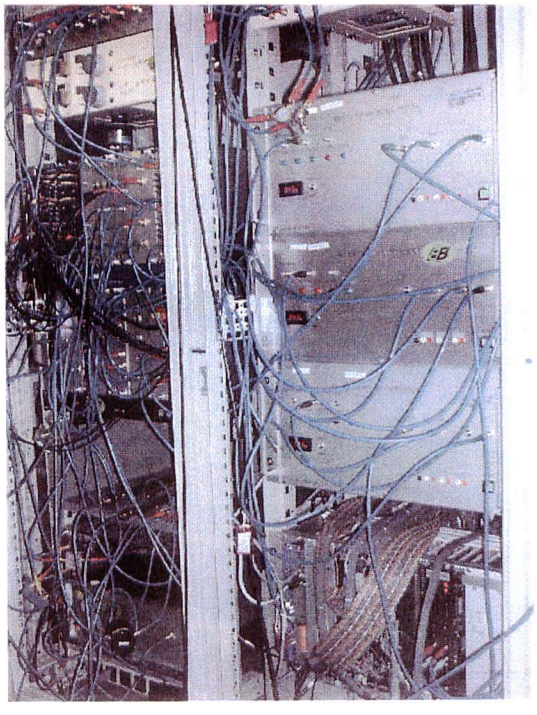

Two-tap FIR filter

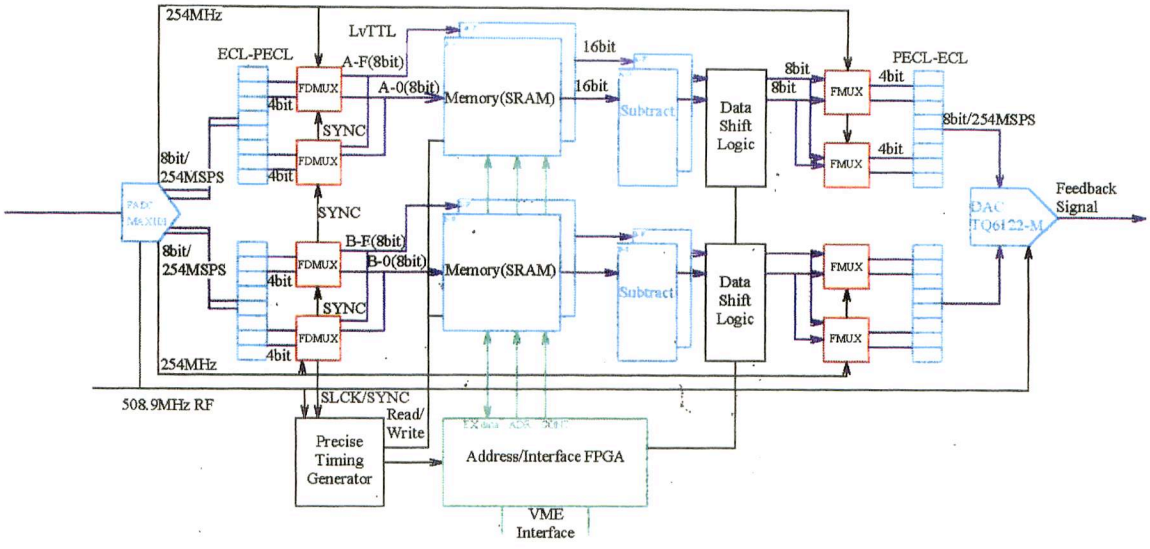

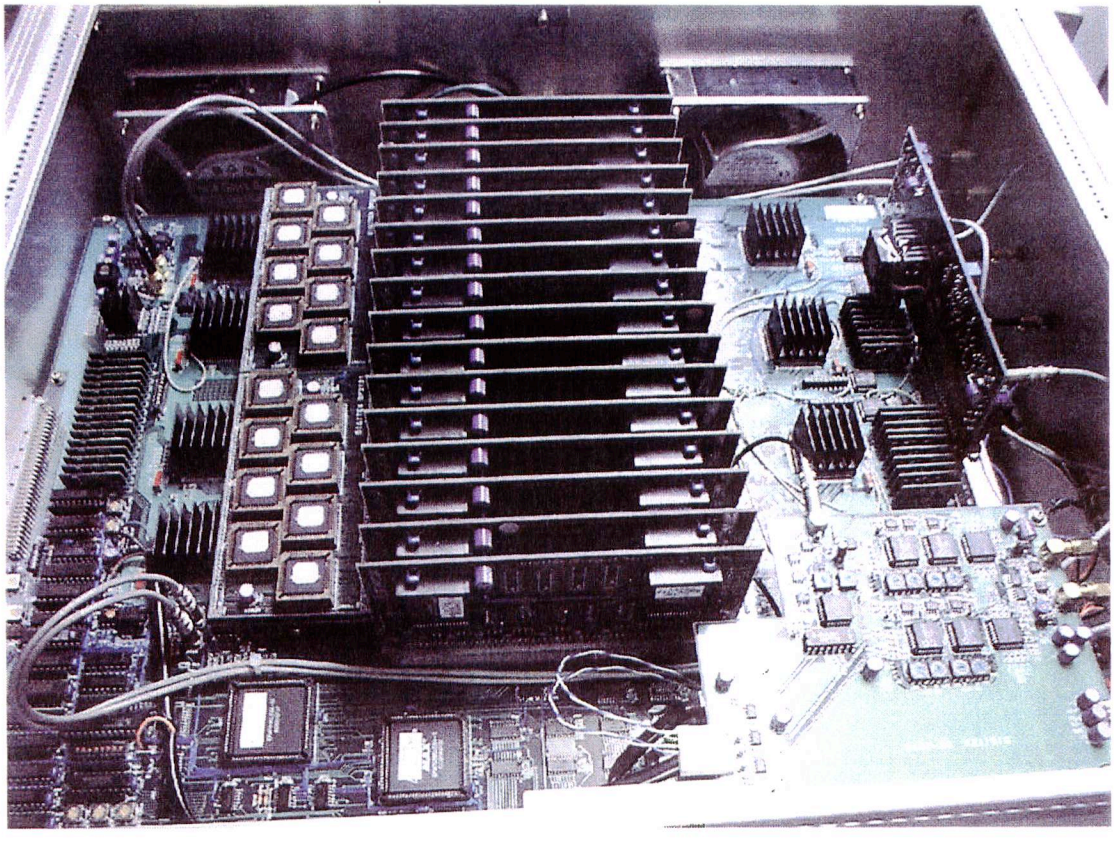

Two-Tap FIR filter

☆DC suppression

☆90° phase shift

☆Digital delay

Kick=α(A-B)

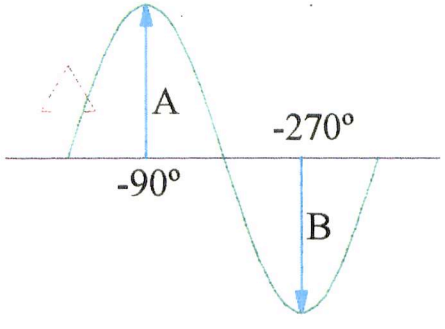

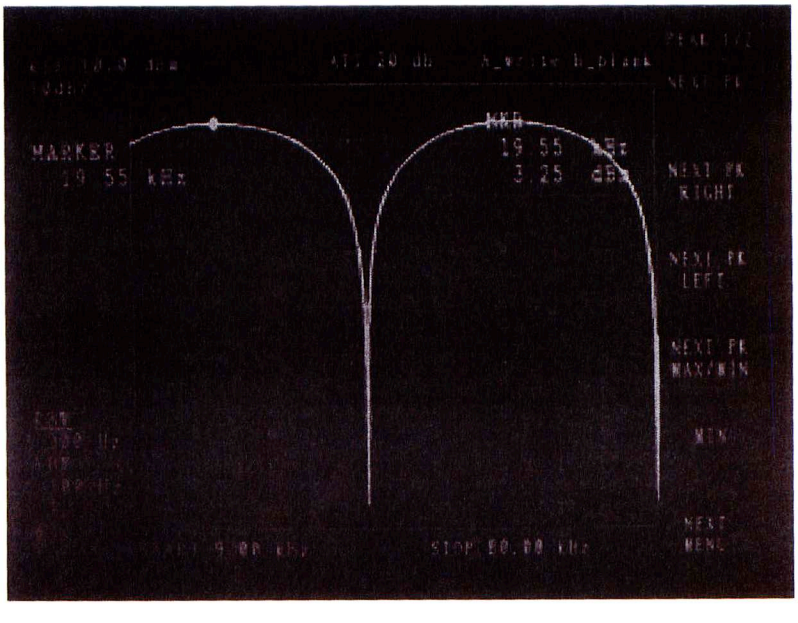

Transverse Amps/Kickers

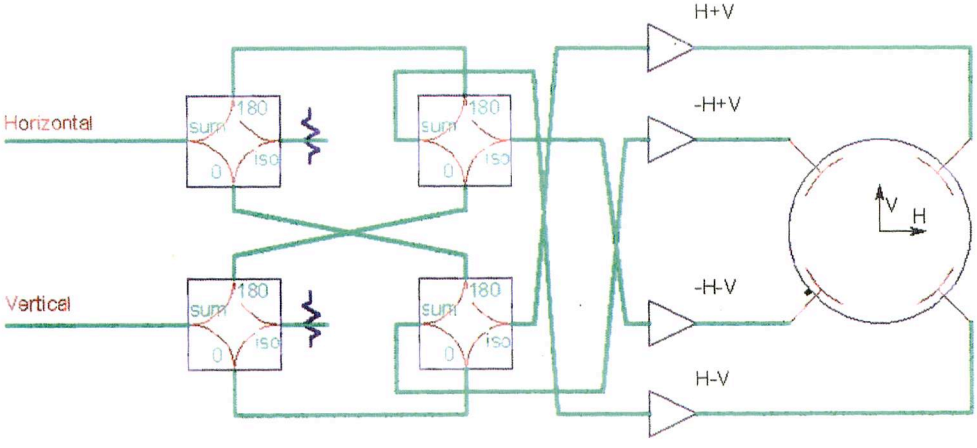

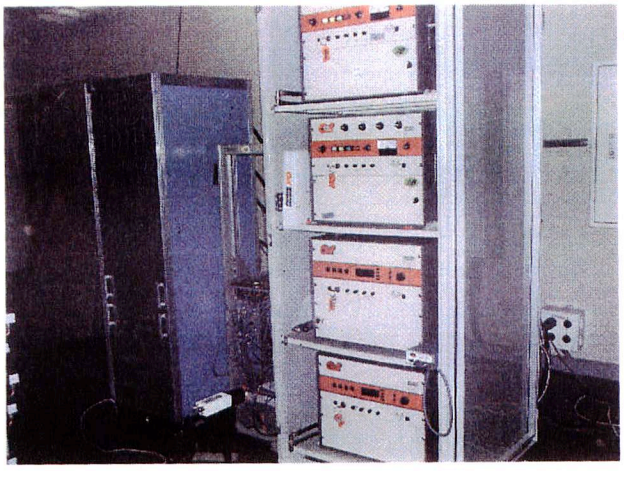

Transverse amplifiers

Transverse kickers (HER)

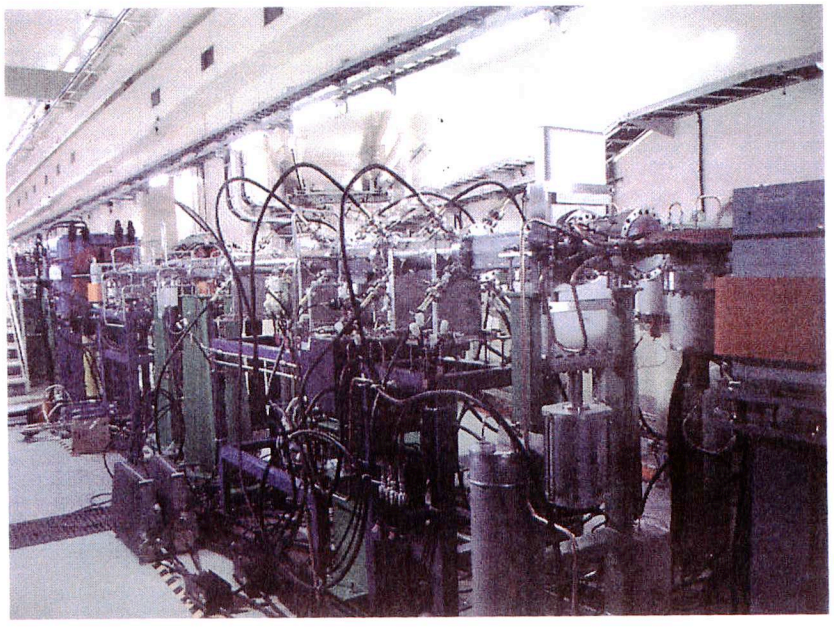

Longitudinal Amps/Kickers

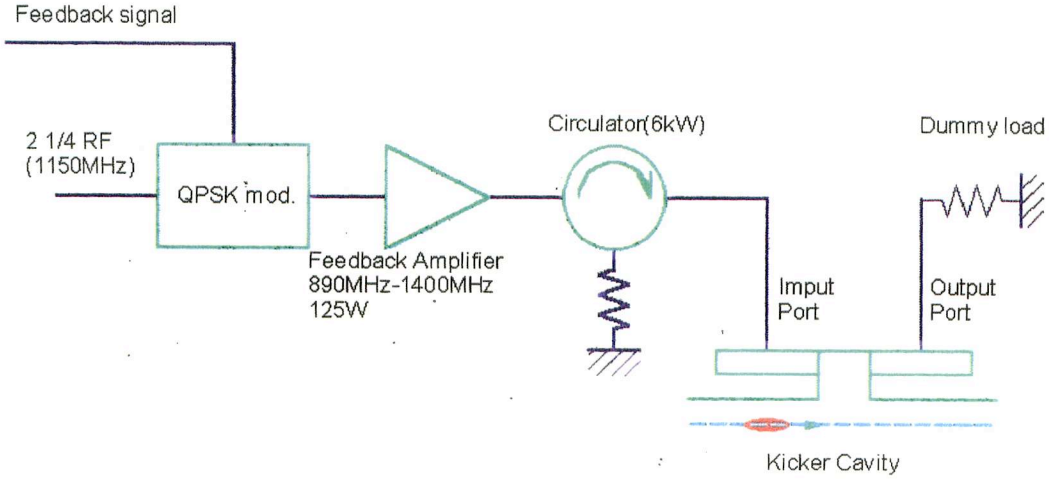

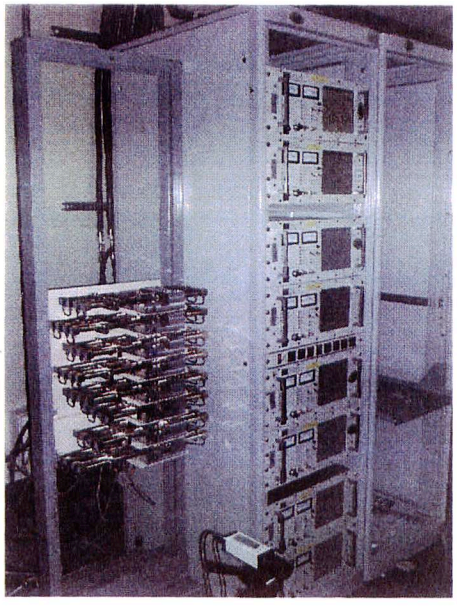

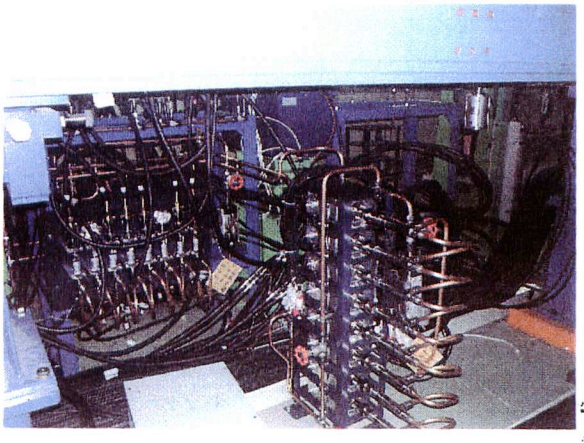

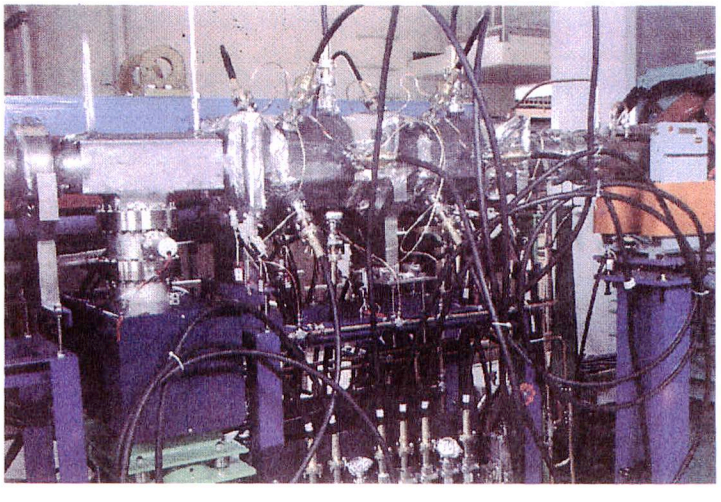

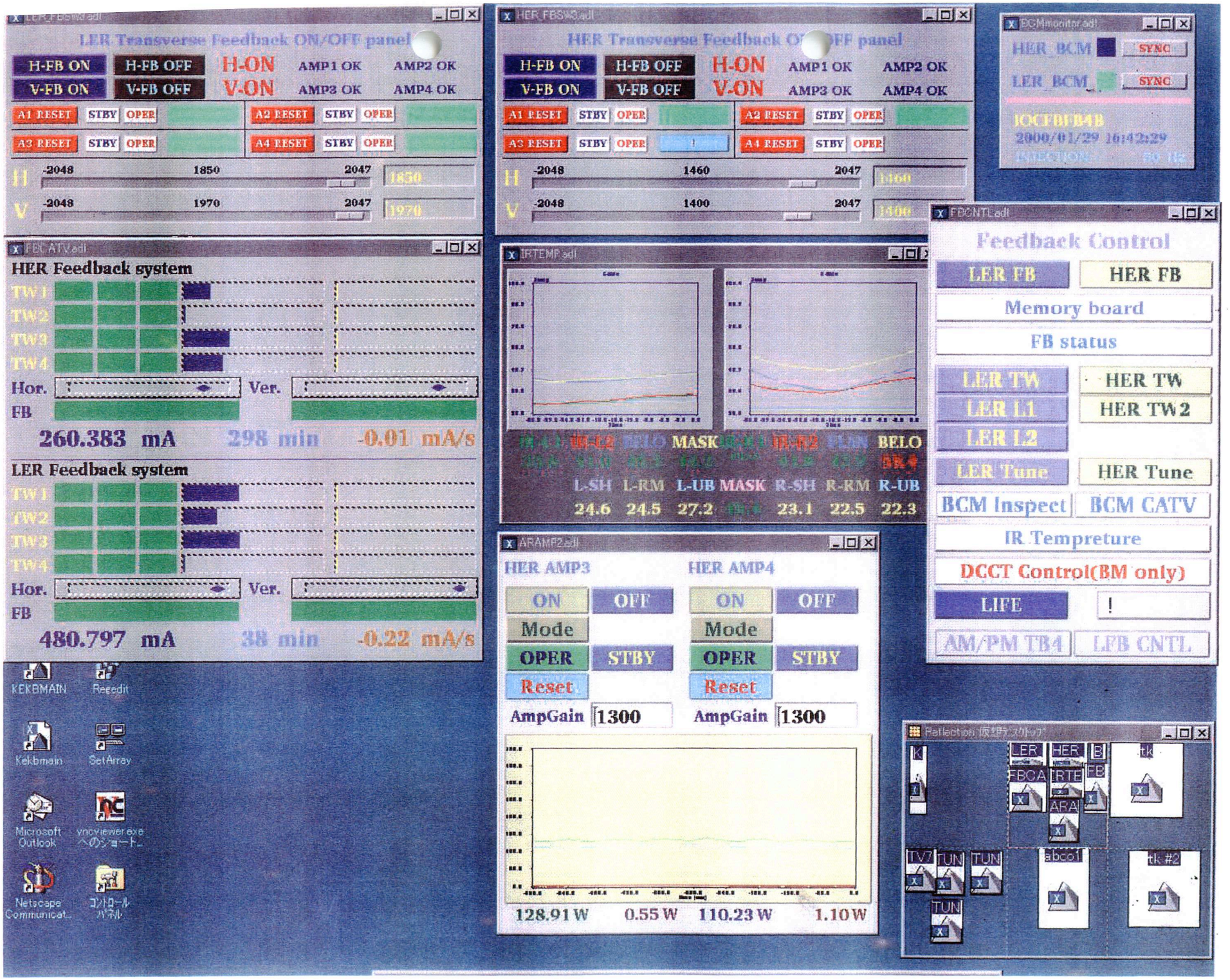
LER Transverse Feedback ON/OFF panel
H-FB ON
H-FB OFF
H-ON
AMP1 OK
AMP2 OK
V-FB ON
V-FB OFF
V-ON
AMP3 OK
AMP4 OK
A1 RESET
STBY
OPER
A2 RESET
A3 RESET
A4 RESET
H
-2048
1850
2047
V
-2048
1970
2047
HER Transverse Feedback ON/OFF panel
1460
1400
BCMmonitor.adl
HER_BCM
SYNC
LER_BCM
DCCT BI B4B
2000/01/29 16:42:29
FBCATV.adl
HER Feedback system
TW1
TW2
TW3
TW4
Hor.
Ver.
FB
260.383 mA
298 min
-0.01 mA/s
LER Feedback system
480.797 mA
38 min
-0.22 mA/s
IRTEMP.adl
MASK
BELO
L-SH
L-RM
L-UB
R-SH
R-RM
R-UB
24.6
24.5
27.2
23.1
22.5
22.3
FBCNTL.adl
Feedback Control
LER FB
HER FB
Memory board
FB status
LER TW
HER TW
LER L1
HER TW2
LER L2
LER Tune
HER Tune
BCM Inspect
BCM CATV
IR Tempreture
DCCT Control(BM only)
LIFE
!
AM/PM TB4
LFB CNTL
ARAMP2.adl
HER AMP3
HER AMP4
ON
OFF
Mode
OPER
STBY
Reset
AmpGain
1300
128.91 W
0.55 W
110.23 W
1.10 W
KEKBMAIN
Reeedit
Kekbmain
SetArray
Microsoft Outlook
vncviewer.exe へのショート...
Netscape Communicat...
コントロール パネル
LER
HER
FBCA
IRTE
ARA
TV7
TUN
abco1
tk #2

Temperature monitoring system

★～200 points monitored (kickers, BPMS, dummy-loads... etc) with Pt.R.

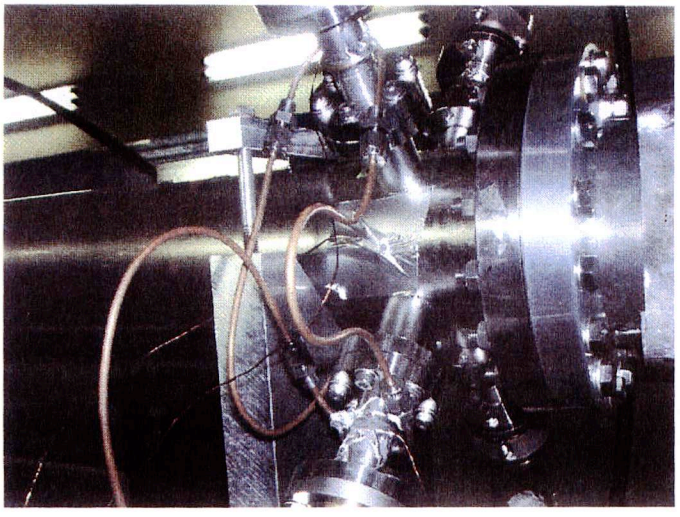

Summary of Temperature Monitor

BMLCT	
UST	23.5
OT	23.8
CORE	23.6
CERA	23.4
DST	23.5

BMLDCCT	
UST	23.6
OT	24.2
CORE	24.3
CERA	23.5
DST	23.5

BMLWCM	
E1	N/A
E2	N/A
E3	N/A
E4	N/A
E5	N/A

FBHTKW	
FT1	23.7
FT2	23.7
FT3	23.8
FT4	24.1
FT5	23.7
FT6	25.2
FT7	23.6
FT8	23.6
BDYS	23.5
BDYUP	23.7
DM1	26.5
DM2	24.2
DM3	23.8
DM4	24.2

FBHTKL	
FT1	23.4
FT2	23.5
FT3	23.4
FT4	23.5
FT5	23.8
FT6	23.4
FT7	23.4
FT8	23.8
BDYS	23.3
BDYUP	23.6
DM1	24.1
DM2	24.2
DM3	23.9
DM4	23.8

FBHMONU	
FTUP	23.3
FTDN	23.0
FTOT	23.2
FTIN	23.4
FTTUP	23.0
FTTDN	23.3

BMHCT	
UST	23.6
OT	24.9
CORE	24.5
IT	24.4
DST	24.0

BMHDCCT	
UST	23.8
OT	25.1
CORE	25.1
IT	24.6
DST	39.6

BMHWCM	
E1	N/A
E2	N/A
E3	N/A
E4	N/A

FBHMOND	
FTUP	25.0
FTDN	25.1
FTOT	24.9
FTIN	25.1
FTTUP	25.1
FTTDN	25.1

FBLLK1	
FT1	24.6
FT2	24.4
FT3	24.3
FT4	24.6
FT5	24.5
FT6	24.2
FT7	24.5
FT8	25.6
BDYUS	25.2
BDYUP	25.4
BDYS	25.2
BDYDS	25.1
MD1	26.0
MD2	26.1

FBLWDM1	
DM1	24.5
DM2	24.5
DM3	24.8
DM4	24.4
DM5	24.4
DM6	24.7
DM7	24.4
DM8	24.4

FBLLK2	
FT1	24.7
FT2	24.6
FT3	24.4
FT4	24.2
FT5	24.7
FT6	24.2
FT7	24.2
FT8	24.7
BDYUS	25.6
BDYUP	25.4
BDYS	25.5
BDYDS	25.3
MD1	26.3
MD2	26.1

FBLWDM2	
DM1	24.5
DM2	24.0
DM3	24.2
DM4	24.3
DM5	24.3
DM6	24.4
DM7	24.4
DM8	24.1

FBLMOND	
BDYUP	24.0
BDYDN	24.0
BDYIN	24.5
BDYOT	24.8
FTUP	27.4
FTDN	27.1
FTIN	26.9
FTOT	26.8
FTTUP	26.6
FTTDN	26.5

FBLCIRC	
C1	23.9
C2	24.2
C3	24.2
C4	24.2
C5	24.1
C6	24.2
C7	24.0
C8	24.1
DM1	23.8
DM2	24.1
DM3	24.7
DM4	24.3
DM5	24.5
DM6	24.2
DM7	24.6
DM8	24.5
E1	N/A
E2	N/A
E3	N/A
E4	N/A

FBLMONU	
BDYUP	24.0
BDYDN	23.9
BDYIN	24.1
BDYOT	24.6
FTUP	26.4
FTDN	26.4
FTIN	26.9
FTOT	26.8
FTTUP	26.7
FTTDN	26.8

FBLTKW	
FT1	28.7
FT2	24.9
FT3	24.4
FT4	24.8
FT5	24.6
FT6	24.7
FT7	25.0
FT8	24.6
BDYUP	25.5
BDYS	25.1
DM1	-100.0
DM2	-100.0
DM3	27.5
DM4	26.6

FBLTKL	
FT1	24.8
FT2	24.9
FT3	24.8
FT4	24.6
FT5	24.5
FT6	24.9
FT7	23.7
FT8	24.6
BDYUP	25.9
BDYS	25.5
DM1	25.4
DM2	25.7
DM3	25.1
DM4	25.4

2. Experience with the transverse feed-back systems.

☆During the commissioning, we have encountered strong coupled-bunch instabilities in the transverse planes for both rings.

HER

★Horizontal instabilities during injection

★Vertical instabilities around lower modes.

LER

★Horizontal instabilities during injection

★Vertical instabilities.

★Longitudinal instabilities (strongly depends on the MASK positions)

Successfully suppressed with the transverse bunch-by-bunch feedback systems (and high chromaticities) .

File Edit Window 01/26/2000 15:45:52 Help

HER Temp01_26_2000_12:45:31

HER

Set tunes

ν_x(model)	44.5331
ν_y(model)	42.1259
ν_x(meas)	44.5406
ν_y(meas)	42.1174

Get tunes

meas->model

Match tunes

Optics Plot

beginning point(m)	1540.0
end point(m)	1590.0
Component	Q*|P*

Show Optics

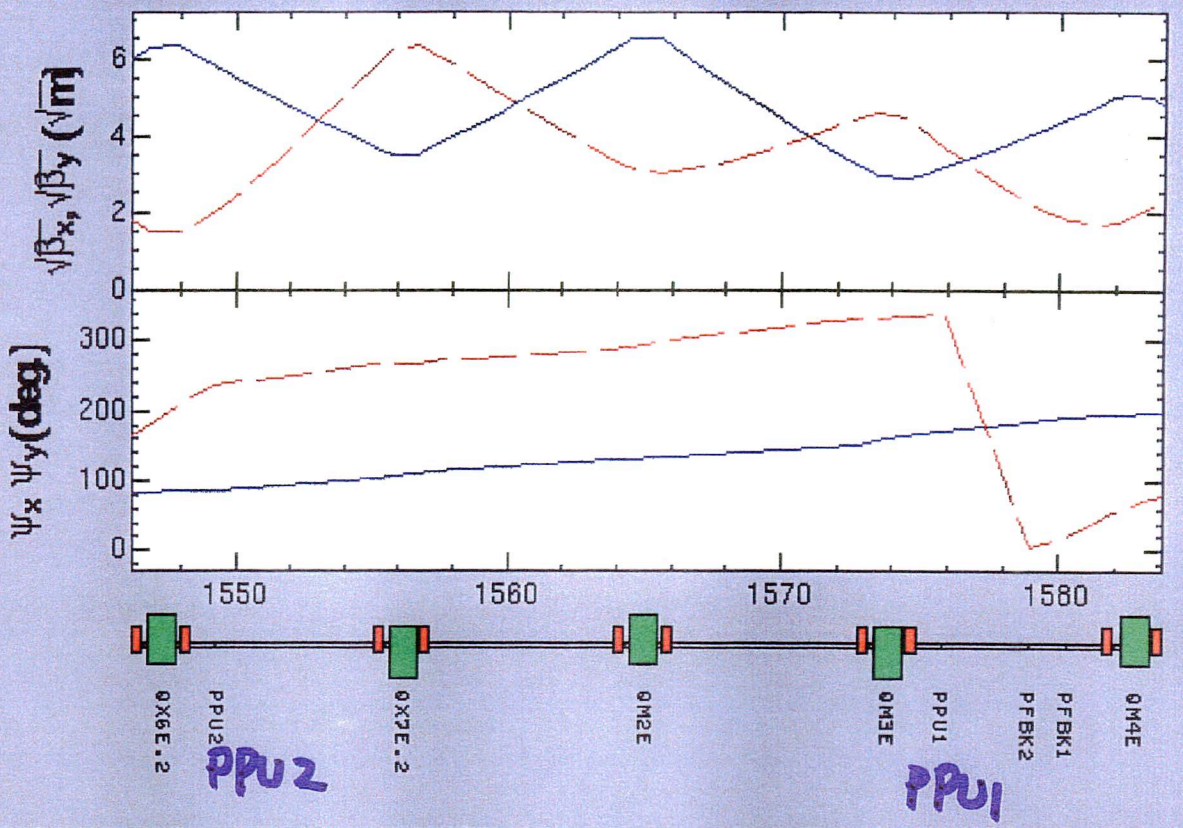

PPU1

β_x(m)	10.01	β_y(m)	13.62	ψ_x(deg)	172.7	ψ_y(deg)	340.7

PPU2

β_x(m)	33.28	β_y(m)	4.085	ψ_x(deg)	87.82	ψ_y(deg)	236.4

PFBK1

β_x(m)	19.79	β_y(m)	3.259	ψ_x(deg)	191.2	ψ_y(deg)	22.92

PFBK2

β_x(m)	16.18	β_y(m)	4.913	ψ_x(deg)	186.9	ψ_y(deg)	3.209

Menu Bar

Phase relations between Kicker and BPMS

LER Horizontal

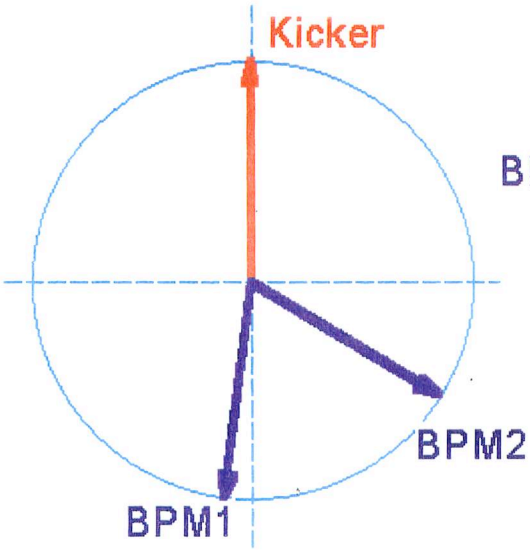

LER Vertical

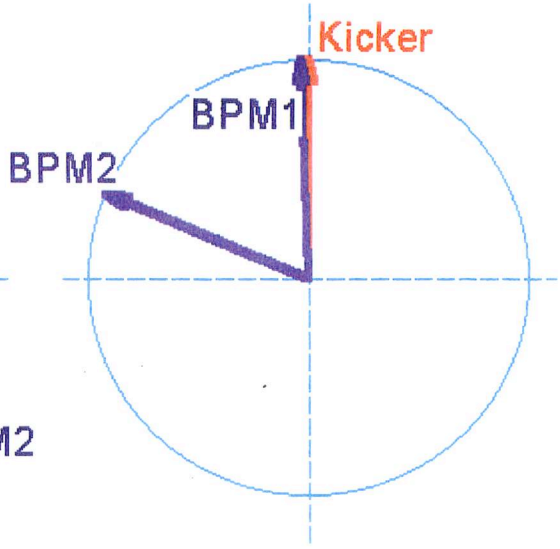

HER Horizontal

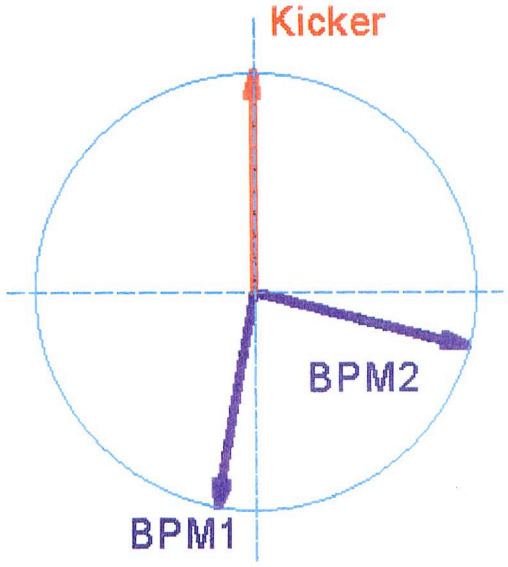

HER Vertical

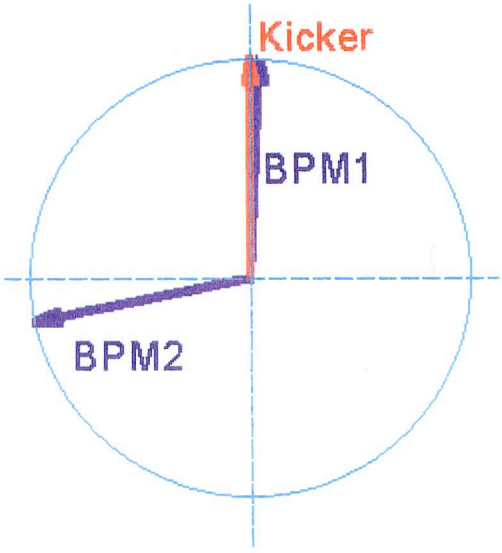

Digital filter:

☆2(Horiz. and Vert.) for HER

3(H, V and Longitudinal) for LER

☆Simple delay mode(transverse)

Delay : HER 9.03μs

LER 9.29μs

☆Two-tap mode for transverse system?

◎Reduction of DC components

×Very touchy response on the selection of betatron tunes.

★Detailed machine studies are necessary.

Large-scale memory boards

☆Two bunch current monitors (HER and LER)

☆6 Bunch oscillation recorders (HER 3, LER 3)

Feedback damping behavior

★Damping time

$t_D \propto 1/(\text{bunch current})$

Design < 1ms (100 turns) /0.5mA

★Measured ～0.5ms/0.4mA

LER Horizontal oscillation(injection)

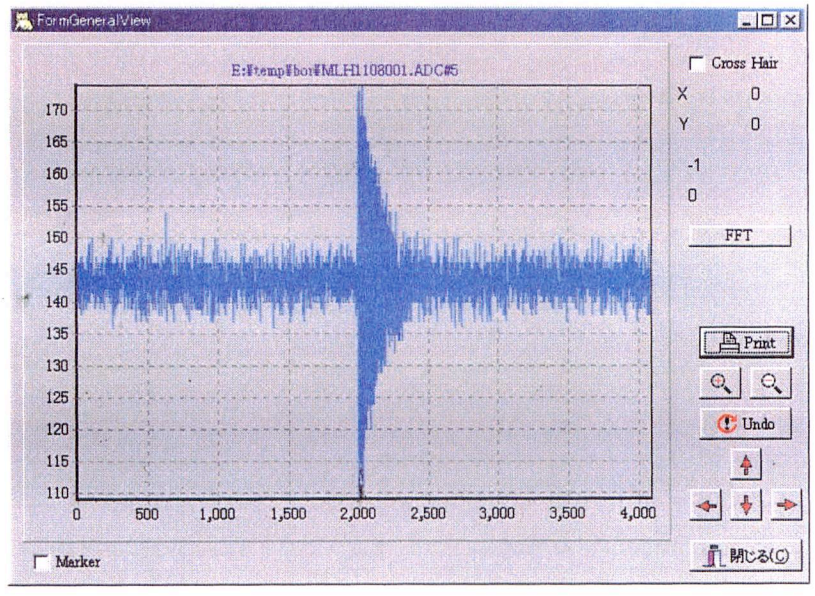

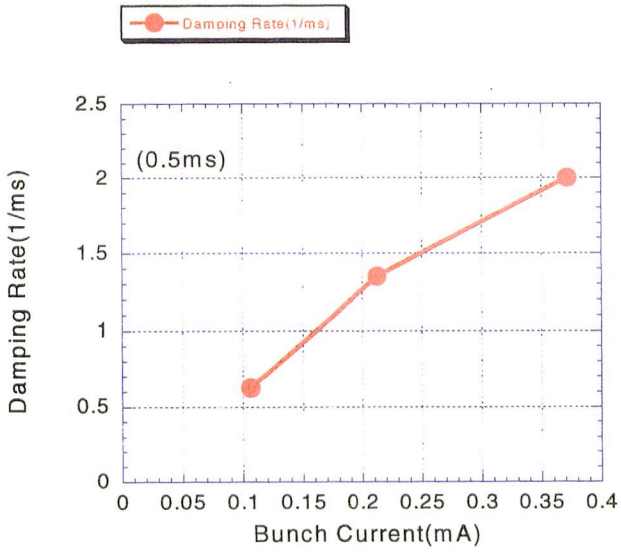

30/Oct/1999

15:50 LER FB Tune . 5413 . .1086

これは Tuning だけ

5/120/4 (ボウ) で入れる 25Hz

200mAでcheck. V OFFで少しinst あり.

H は OFFでも良し.

253mA /10分 V 入れるとすぐにビームロス

要check (Gain 上げすぎ?)

270mA くらいで 少しバンチトレインしろ すぎる

V FB Gain 下げるべく 下げるべきか.

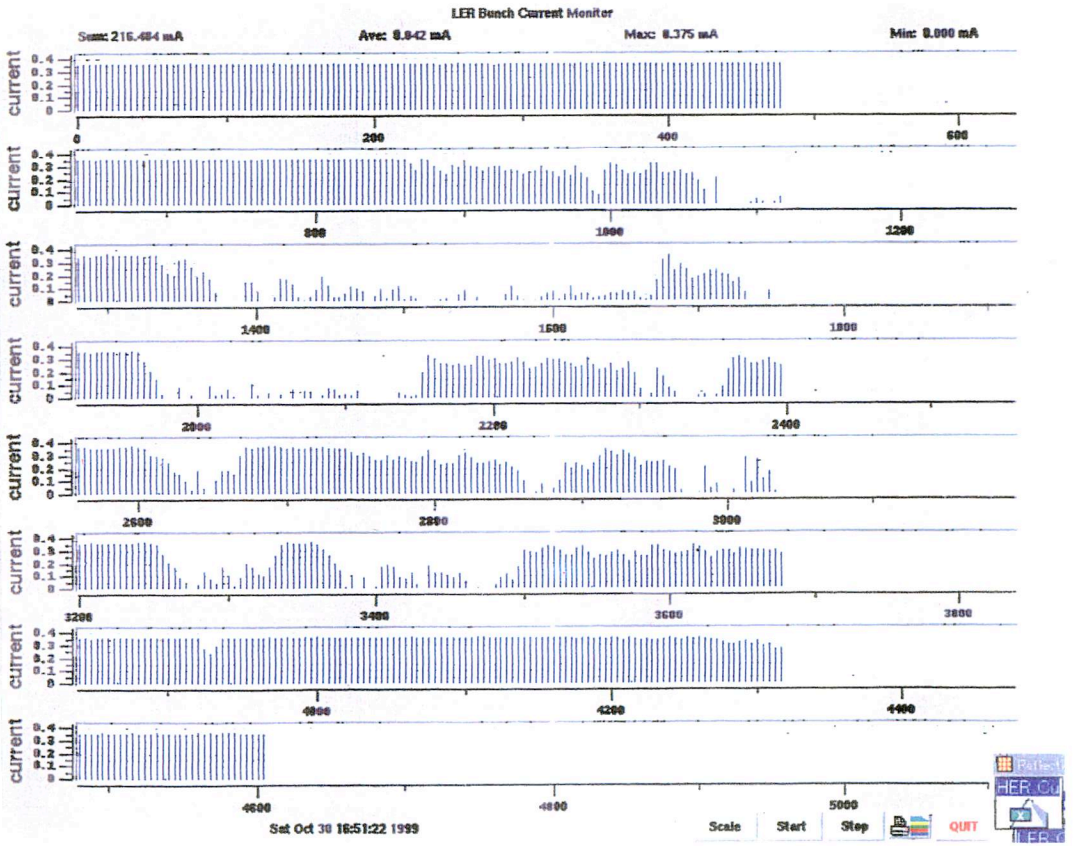

H FB OFFでも instability 出る.

V FB Tuning. V gain 上げ.

360mA L ~ 60分.

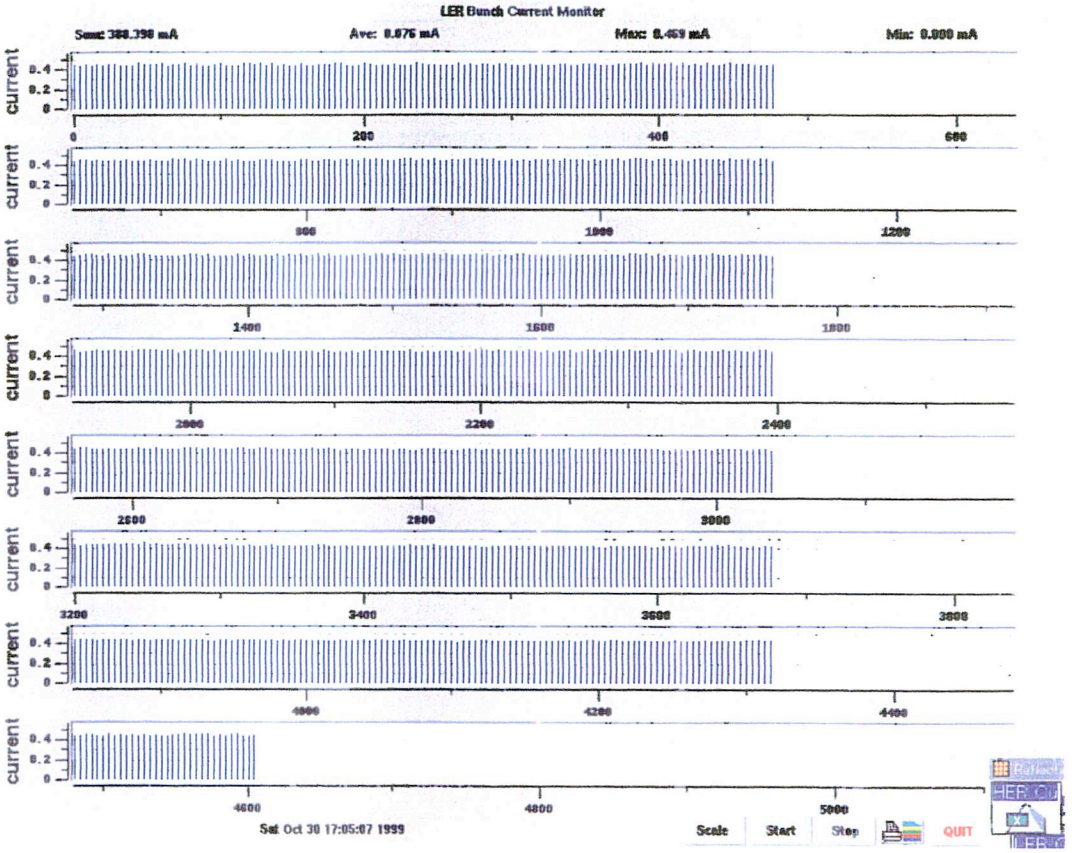

← Lower gain (LER-V)

300mA → 200mA

Troubles/remaining problems

A) Breakdown of transverse wideband amplifiers.

★7/8 amplifiers have broken.

☆FETs of final amplifier units are destroyed.

☆Max. power and gain reduced. 300W→<50W

★Possible causes:

☆Beam power from kickers

But: 300MHz low pass filters

No reflected power from directional couplers.

☆Output power too high

But: No forward power interlock trips.

★Investigation continues in cooperation with the manufacturer/agent.

B)Vacuum pressure around transverse kickers at high-stored current.

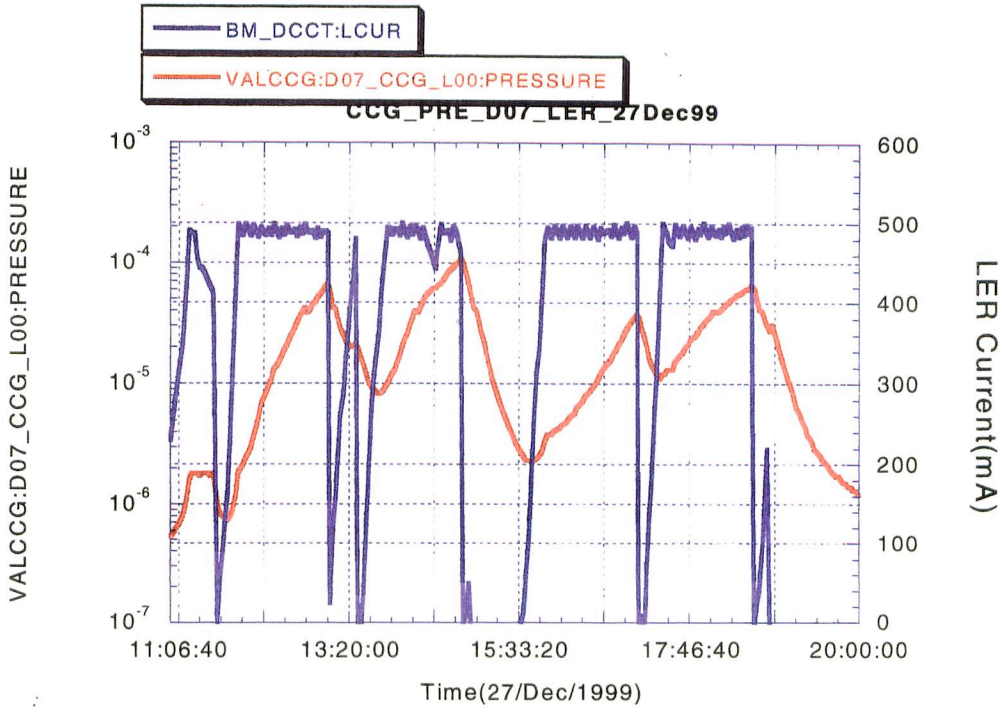

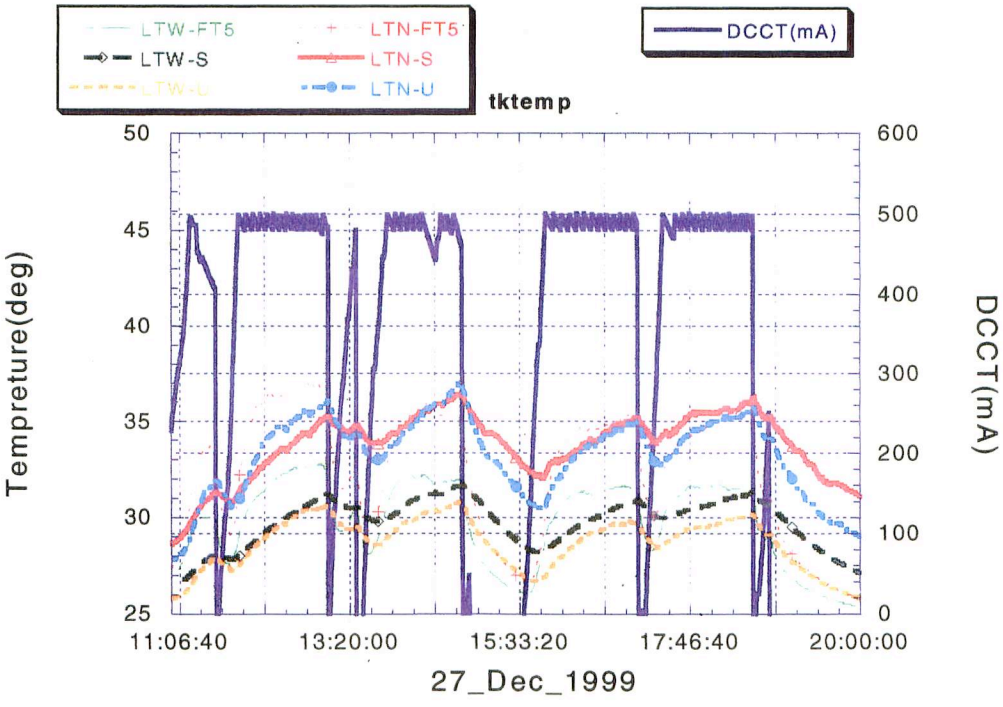

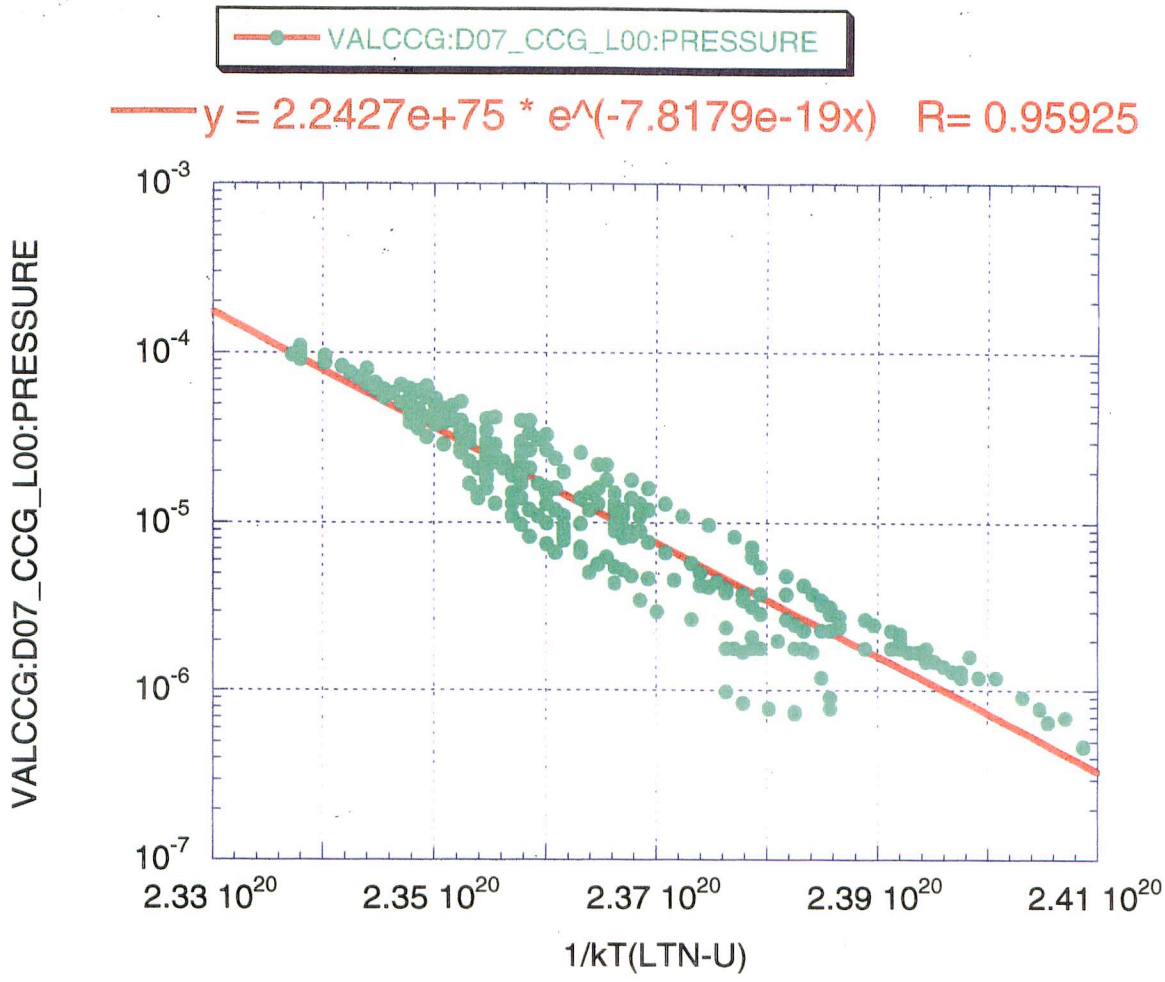
VALCCG:D07_CCG_L00:PRESSURE
y = 2.2427e+75 * e^(-7.8179e-19x) R= 0.95925
VALCCG:D07_CCG_L00:PRESSURE
10^-3
10^-4
10^-5
10^-6
10^-7
2.33 10^20
2.35 10^20
2.37 10^20
2.39 10^20
2.41 10^20
1/kT(LTN-U)

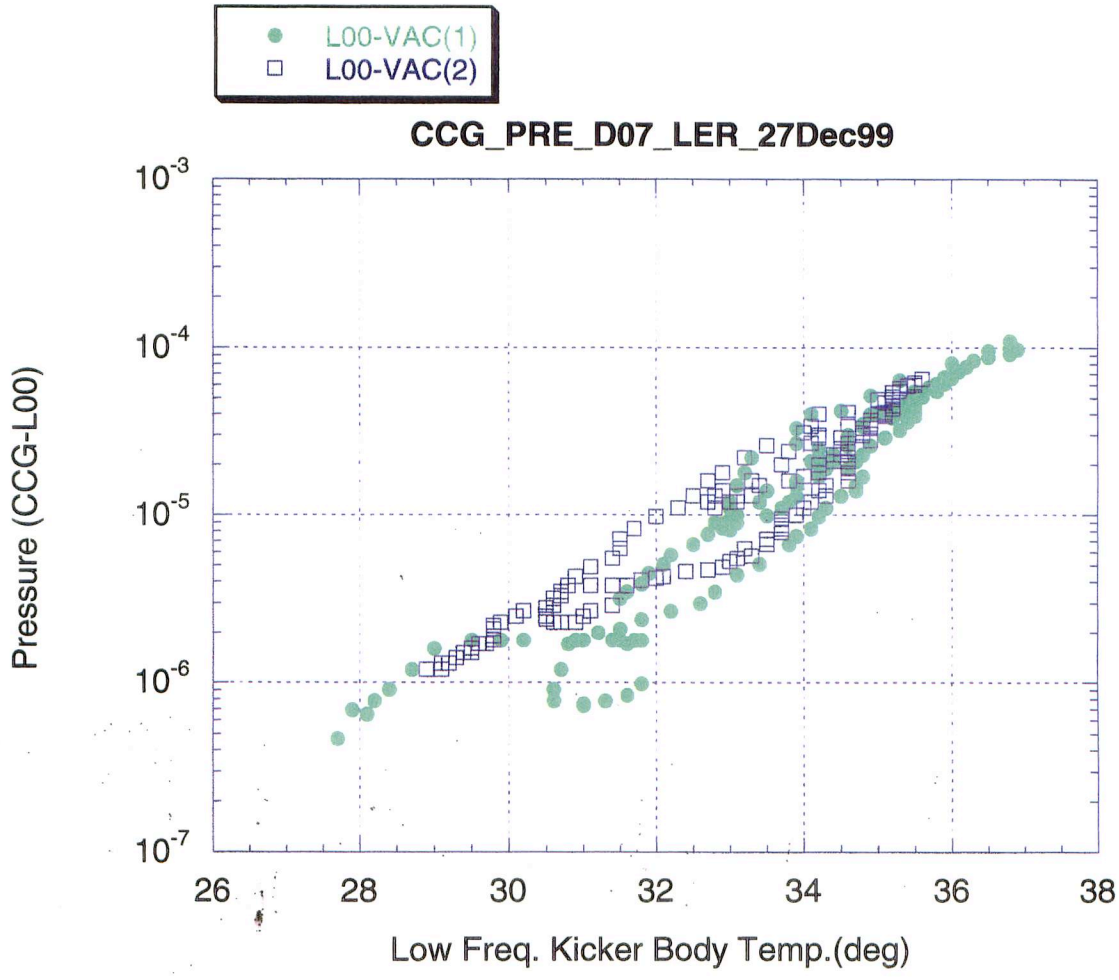
L00-VAC(1)
L00-VAC(2)
CCG_PRE_D07_LER_27Dec99
Pressure (CCG-L00)
10^-3
10^-4
10^-5
10^-6
10^-7
26
28
30
32
34
36
38
Low Freq. Kicker Body Temp.(deg)

★Vacuum pressure increases gradually

$<1\times10^{-6}$pa => 1×10^{-4}pa

when keeping high beam current

★Possible causes..

☆Cu-coated structures

Porous surface?? Impurities??

☆Heating

Wall loss per stripline

<1.1W(2.6A with 2000 bunches)

HOM heating???

Thermal conductivity

Not so good but thermal radiation is effective.

★Replace the stripline-electrodes with copper ones if necessary.

C)Front-end electronics response

★Main response width <2ns

Some channels have not very clean responses.

★Offset changes with the bunch current and loaded RF-phase at high bunch current.

★There exist weak patterns.

Ex. Few bunches with large gap.

☆Continue the tuning of the front-end components.

☆Increase the detection freq. to 2.5GHz.

D) Equalization of low frequency feedback kickers and wideband kickers.

★ Tried on HER but not working well.

★ Power on wideband amplifiers reduced but lose gain margin.

☆ Tuning of low pass/high pass filter will be necessary.

☆ Adjusting the group delay of both amplifiers is also necessary.

E) Longitudinal system.

☆ Survey of the performance of the system is necessary.

F) Too few components/monitors controllable from the central control room.

☆ Prepare monitors and tuning components.

3. Transient-domain analysis of the instabilities.

☆Bunch Oscillation Recorder

Memory 20MB

=4096 turns X 5120 bunches

= 41 ms

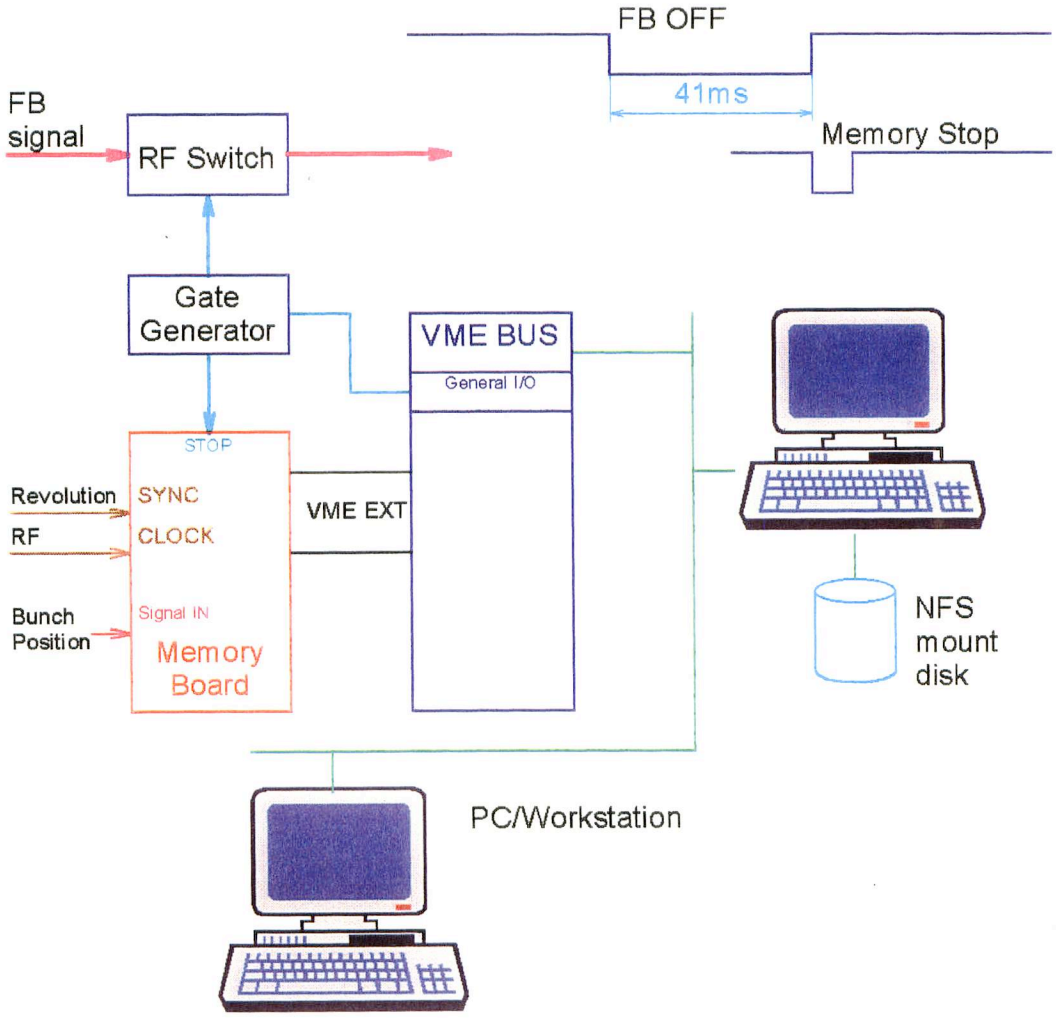

Bunch Oscillation Recorder

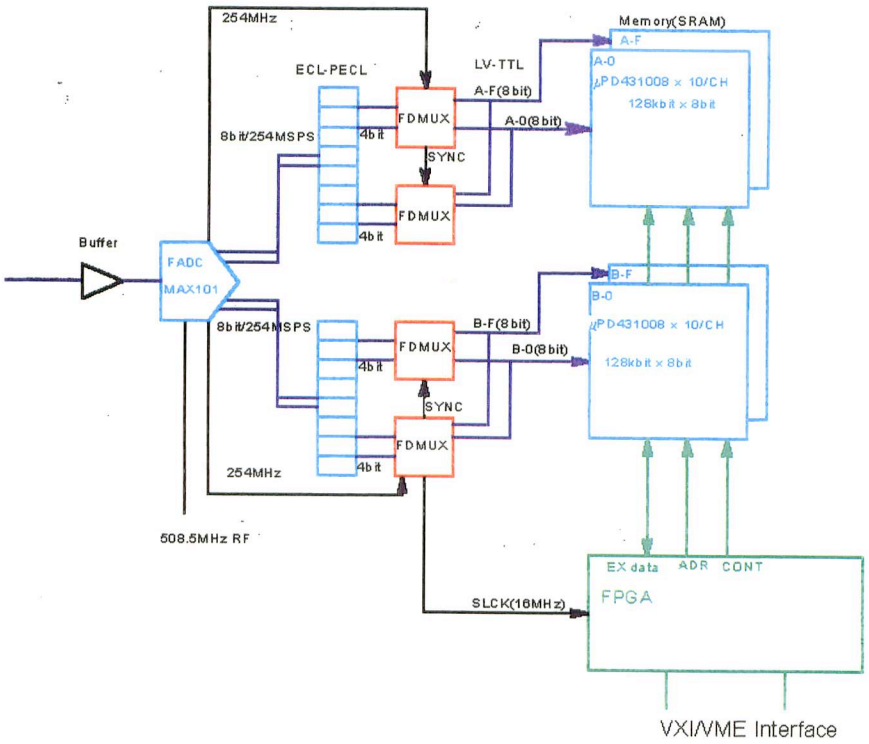

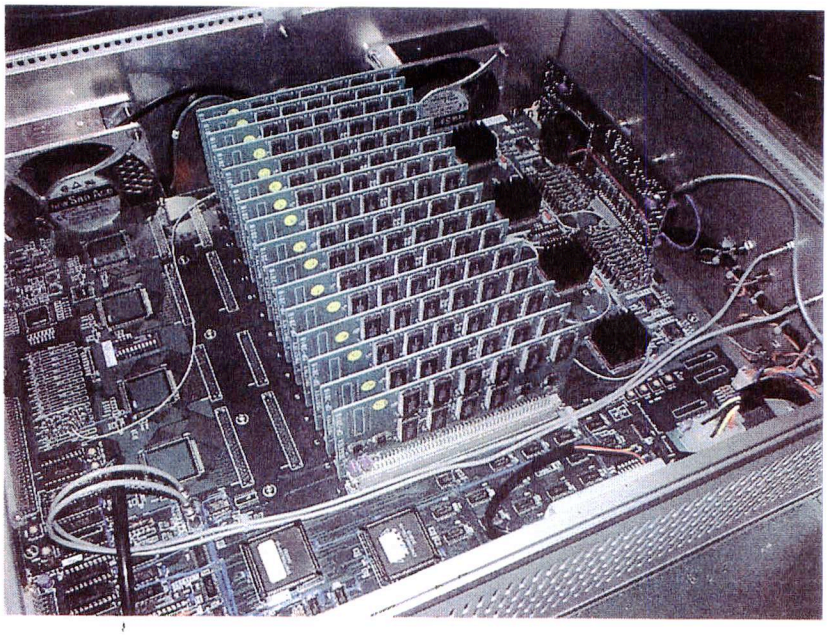

LER Horizontal

120mA → 76mA

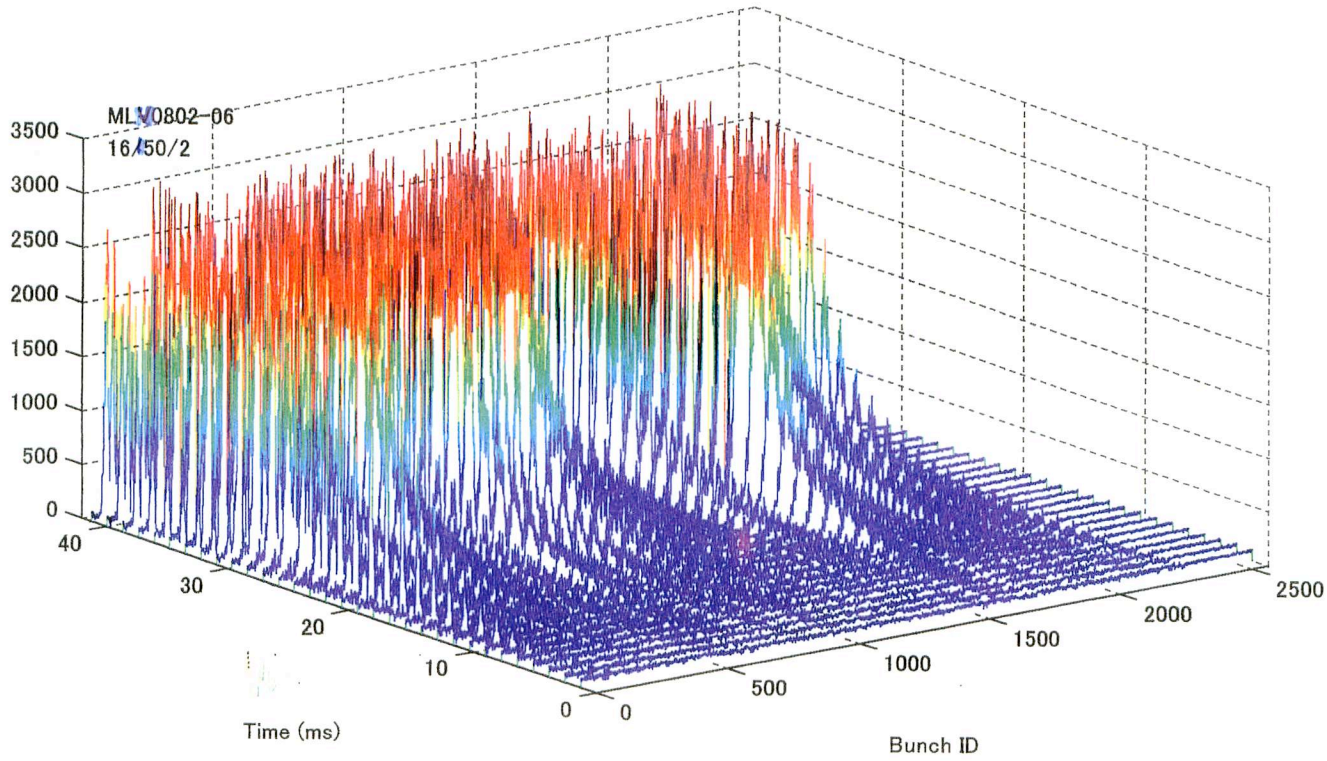

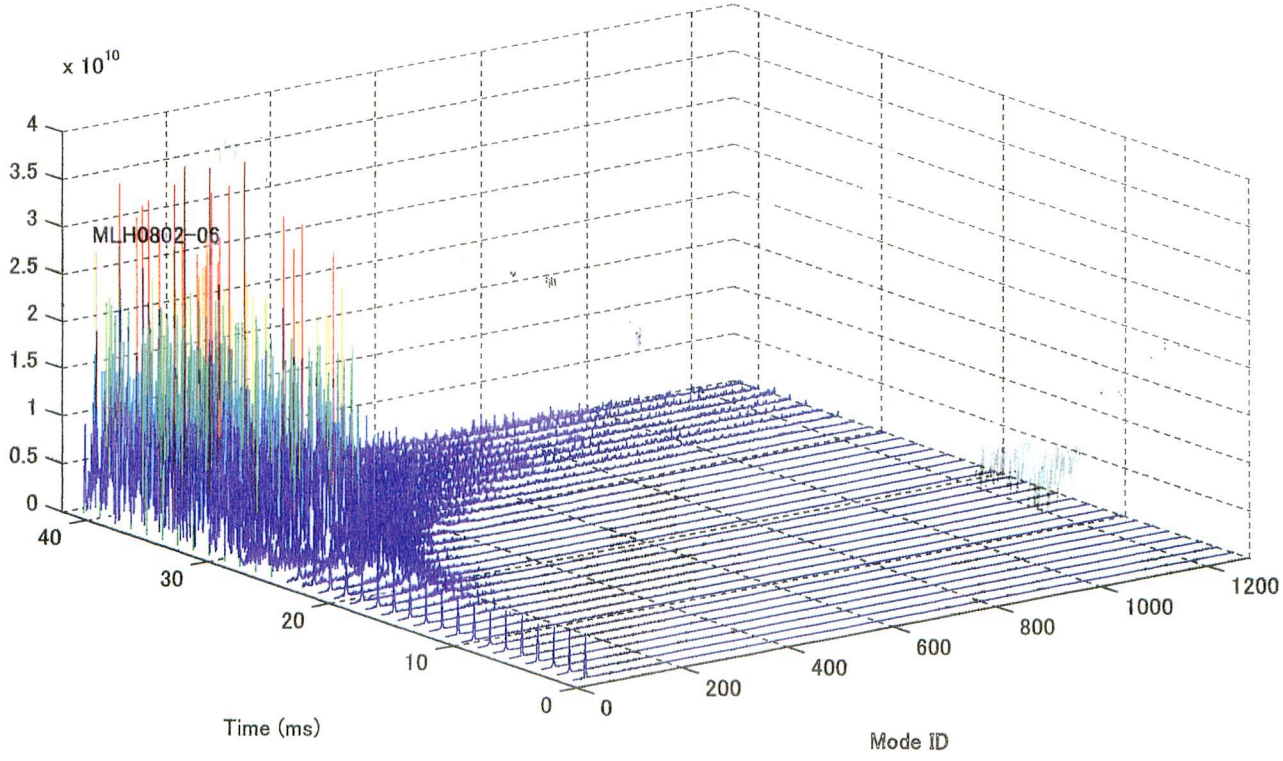

4.Summary

☆Transverse bunch-by-bunch feedback systems have been working very well, contributing to both the commissioning of the rings and the operation of the colliding experiment. Feedback damping time of about 0.5ms has been achieved.

☆Feedback related tools such as the bunch oscillation recorder and the bunch current monitor are working very well.

☆Several problems need to be solved.

- ★Amplifier breakdown.
- ★Vacuum pressure around kickers.
- ★Detector offset.
- ★Equalization system for low freq. system and wideband system.
- ★Survey of longitudinal systems.
- ★Control systems.

Published reports

1)"Commissioning of KEKB Bunch Feedback Systems"
M.Tobiyama and E.Kikutani,
PAC'99 ,KEK Preprint 99-4

2)"Bucket Selector System for KEKB",
E.Kikutani, M.Suetake and M.Tobiyama
icaleps 99, KEK Preprint 99-116

3)"Bunch by bunch feedback systems for KEKB rings",
M.Tobiyama, E.Kikutani and J. W. Flanagan
12th Symposium on Accl. Sci.Tech.

4)"Development of a high-speed digital signal process system for bunch-by-bunch feedback systems",
Makoto Tobiyama and Eiji Kikutani
Phys. Rev. ST Accl. Beams 3,012801(2000)